SmokeFire

EX4
EX6

Wood Pellet Grill

OWNER'S MANUAL

A MAJOR CAUSE OF FIRES IS FAILURE TO MAINTAIN REQUIRED CLEARANCES (AIR SPACES) TO COMBUSTIBLE MATERIALS. IT IS OF UTMOST IMPORTANCE THAT THIS PRODUCT BE INSTALLED ONLY IN ACCORDANCE WITH THESE INSTRUCTIONS.

53508

US

08/06/23

SAFETY

READ ALL INSTRUCTIONS BEFORE INSTALLING AND USING THE APPLIANCE. This Owner's Guide contains important product dangers, warnings, and cautions. Please read this entire manual before assembly and use of this pellet fuel-burning appliance. Failure to follow these instructions could result in property damage, bodily injury or even death. Contact local building or fire officials about restrictions and installation inspection requirements in your area. For assembly instructions, refer to the Assembly Guide. **SAVE THESE INSTRUCTIONS.**

Visit weber.com, select your country of origin, and register your grill today.

DANGER, **WARNING**, and **CAUTION** statements are used throughout this manual to emphasize critical and important information. The statements are defined as:

⚠ **DANGER!**: Indicates a hazardous situation which, if not avoided, ***will result in death or serious injury***.

⚠ **WARNING!**: Indicates a hazardous situation which, if not avoided, ***could result in death or serious injury***.

⚠ **CAUTION!**: Indicates a hazardous situation which, if not avoided, ***could result in minor or moderate injury***.

⚠ **DANGER!** Keep flammable vapors and liquids away from the grill. Never use gasoline, gasoline-type lantern fuel, kerosene, charcoal lighter fluid, or similar liquids to start or 'freshen up' a fire in this appliance. Keep all such liquids well away from the appliance when in use.

⚠ **WARNING!** For outdoor use only. The installation of the pellet grill shall be located so flue gases including smoke will not communicate or enter any building. Consult with the local fire or building codes for additional requirements.

⚠ **WARNING!** Creosote – Formation and need for removal. When wood pellets are burned slowly, they produce tar and other organic vapors that combine with expelled moisture to form creosote. When ignited, this creosote makes an extremely hot fire.

⚠ **WARNING!** The ash and grease system and cookbox should be inspected before each cook to determine when grease and/or creosote buildup has occurred. When grease or creosote has accumulated, it should be removed to reduce the risk of fire.

⚠ **WARNING!** Disposal of ashes - Always wait for the grill to completely cool after proper shutdown. Do not dispose of any grease or ash until they are fully cooled.

⚠ **WARNING!** Use only WEBER SMOKEFIRE ALL NATURAL HARDWOOD PELLETS in this grill. Do not use pellet fuel labeled as having additives.

⚠ **WARNING!** Remove pots and pans while the operating appliance is unattended, to reduce the risk of fire.

⚠ **CAUTION!** Do not use accessories not specified for use with this appliance.

⚠ **WARNING!** Follow these guidelines to prevent carbon monoxide, a colorless, odorless gas from poisoning you, your family or others.

- Know the symptoms of carbon monoxide poisoning: headache, dizziness, weakness, nausea, vomiting, sleepiness, and confusion. Carbon monoxide reduces the blood's ability to carry oxygen. Low blood oxygen levels can result in loss of consciousness and death.
- See a doctor if you or others develop cold or flu like symptoms while cooking or in the vicinity of this appliance. Carbon monoxide poisoning, which can easily be mistaken for a cold or flu, is often detected too late.
- Alcohol consumption and drug use increase the effects of carbon monoxide poisoning.

⚠ **WARNING!** Carbon monoxide is especially toxic to mother and child during pregnancy, infants, the elderly, smokers, and people with blood or circulatory system problems, such as anemia, or heart disease.

⚠ **WARNING!** Do not use the grill in a confined and/or habitable space e.g. houses, tents, caravans, motor homes, boats. Danger of carbon monoxide poisoning fatality.

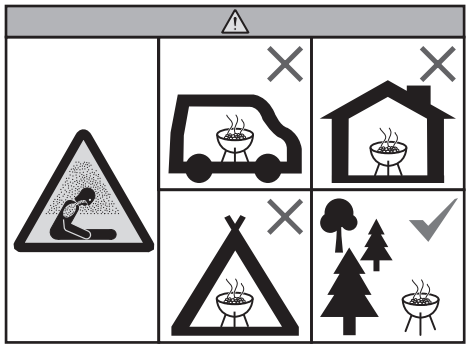

Only applicable to customers in Mexico:

⚠ **WARNING!** This equipment is not intended for use by persons (including children) whose physical, sensory or mental capacities are impaired or reduced, or who lack experience and knowledge, unless such individuals receive supervision or training on the operation of the equipment by a person responsible for their security.

⚠ **WARNING!** Children should be supervised to ensure that they do not use this equipment as a toy.

DANGERS

⚠ **DANGER!** Do not use indoors! This grill is designed for outdoor use in a well-ventilated area and is not intended for and should never be used as a heater. If used indoors, toxic fumes will accumulate and cause serious bodily injury or death.

⚠ **DANGER!** This grill is not intended for commercial use and is designed for outdoor household use only.

⚠ **DANGER!** Do not use this grill in a garage, building, breezeway, tent, lanai, screened in porch, or any other enclosed area.

⚠ **DANGER!** Never perform maintenance on this grill while it is plugged into a power source. Always unplug the grill before servicing.

⚠ **DANGER!** Hazardous voltage is present within the grill and can shock, burn or cause death. Always unplug the grill from the power source before servicing or cleaning.

WARNINGS

⚠ **WARNING!** Do not use this grill unless all parts are in place. This grill must be properly assembled according to the assembly instructions. Improper assembly may be dangerous.

⚠ **WARNING!** Never operate this grill without the ash and grease system in place. Always use a drip pan to collect grease within the drawer.

⚠ **WARNING!** Never remove the ash and grease system while operating the grill.

⚠ **WARNING!** Do not use charcoal briquettes, liquid fuel or lava rock with this grill.

⚠ **WARNING!** Do not use this grill under any overhead combustible construction including ceilings and overhangs.

⚠ **WARNING!** The use of alcohol, prescription, or non-prescription drugs may impair the consumer's ability to properly assemble or safely operate the grill.

⚠ **WARNING!** Exercise caution when operating your grill. It will be hot during preheating, cooking or cleaning, and should never be left unattended or moved while in use.

⚠ **WARNING!** Keep children and pets away.

⚠ **WARNING!** This grill is not intended to be installed in or on recreational vehicles and/or boats.

⚠ **WARNING!** Do not use this grill within 2 feet (61cm) of any combustible material. Combustible materials include, but are not limited to, wood or treated wood decks, patios, porches, vinyl siding, and patio doors.

⚠ **WARNING!** Keep the grill on a secure, level surface at all times, clear of combustible materials.

⚠ **WARNING!** Do not use the grill in high winds.

⚠ **WARNING!** Do not wear clothing with loose flowing sleeves while lighting or operating the grill.

⚠ **WARNING!** Never touch the cooking grates, burn pot, glow plug, ash and grease system, or grill to see if they are hot.

⚠ **WARNING!** When finished cooking, use the main menu or push and hold the dial to run the shutdown procedure and extinguish any fuel.

⚠ **WARNING!** Use heat-resistant barbecue mitts or gloves while cooking and handling lid, warming rack, thermometer, or temperature probes.

⚠ **WARNING!** Maximum side table load is 40 pounds. Do not lean on or overload the side table.

⚠ **WARNING!** Do not move, cover or store the grill until all fuel is extinguished and the grill is completely cool.

⚠ **WARNING!** Do not use water to control flare ups or to extinguish fuel.

⚠ **WARNING!** Use this grill only as described in this manual. Misuse may cause fire, electric shock or injury.

⚠ **WARNING!** This appliance should only be connected to a grounded outlet. Do not use plug adapters. If an extension cord is needed, only use a 14-gauge cable with a grounded plug, suitable for use with outdoor appliances. The maximum length for the extension cord is 13 feet (4 meters). Keep the extension cord as short as possible. Examine the extension cord before use and replace if damaged. To minimize the risk of property damage and/or personal injury, do not use an extension power-supply cable unless it conforms to the specifications listed in this manual.

⚠ **WARNING!** Inspect the power cord and plug regularly for any signs of damage. Do not operate appliance with damaged cord or plug.

⚠ **WARNING!** Do not operate the unit if the electrical outlet is damaged.

⚠ **WARNING!** Always unplug the grill by pulling from the plug. Do not pull from the cord.

⚠ **WARNING!** Do not use the grill within 10 feet (3m) of any body of water, such as a pool or pond.

⚠ **WARNING!** Keep the power cord and extension cord away from any heated surfaces or water and arranged so as not to cause a tripping hazard. Use the power cord management strap to avoid these hazards.

⚠ **WARNING!** The food temperature probes are very sharp and can become hot when in use. Use care when handling the probes to avoid the risk of injury.

⚠ **WARNING!** Do not allow the hopper to empty during operation of this grill.

⚠ **WARNING!** The power cord supplied with your grill has a three-prong (grounding) plug for your protection against electrical shock hazard and should be plugged directly into a grounded three-prong outlet. Do not cut, remove or modify the plug in any way.

⚠ **WARNING!** WEBER recommends that you regularly check the burn pot, auger and cookbox for any obstructions that might block and prevent proper air flow. See the *RECOMMENDED CLEANING* section for more details.

⚠ **WARNING!** If the grill is stored outside during periods of non-use, rain or high humidity, the wood pellets should be inspected within the hopper to ensure they are dry. Hardwood pellets, when wet or exposed to high humidity, can expand, break apart and clog or obstruct the auger feeding system.

⚠ **WARNING!** If using the WEBER CONNECT app to monitor the operation of the grill, make sure that all safety precautions otherwise applicable to the operation of the grill have been observed prior to using the grill. Someone familiar with the operation of the grill must be in close proximity of the grill in order to address any emergencies that could arise. Do not leave the grill unattended.

⚠ **WARNING!** To decrease the chance of a grease fire, be sure the ash and grease system, heat diffuser, and all FLAVORIZER bars are all properly installed.

CAUTIONS

⚠ **CAUTION!** Make sure all electrical connections are kept dry and off of the ground.

⚠ **CAUTION!** Observe all local laws and regulations when using this appliance.

⚠ **CAUTION!** When connecting this appliance to a power supply, ensure that the supply voltage corresponds with the voltage rating marked on the appliance label.

⚠ **CAUTION!** Always unplug the grill from the outlet when not in use and before cleaning. Allow the grill to cool before performing maintenance.

⚠ **CAUTION!** Use extreme caution when removing the ash and grease system and disposing of hot grease or ashes.

⚠ **CAUTION!** Always store WEBER SMOKEFIRE ALL NATURAL HARDWOOD PELLETS in a dry place located away from heat-producing appliances and moisture.

CALIFORNIA PROPOSITION 65

⚠ **WARNING!** This product can expose you to chemicals including wood dust, which is known to the State of California to cause cancer. For more information go to www.P65Warnings.ca.gov.

⚠ **WARNING!** This product can expose you to chemicals including combustion by-products (including soot and carbon monoxide), which are known to the state of California to cause cancer and birth defects or other reproductive harm. For more information go to www.P65Warnings.ca.gov.

⚠ **WARNING!** This product can expose you to chemicals including nickel, which is known to the state of California to cause cancer. For more information go to www.P65Warnings.ca.gov.

- 110 -127
- 50/60 Hz
- 85 W
- 2402.0 - 2480.0 MHz

Table of Contents

2 Safety

4 Warranty

5 Cooking System

6 Special Features
- WEBER CONNECT Controller

8 Before Igniting
- Choose a Proper Location to Cook
- Preparing Grill for First Time Startup
- Meal to Meal Maintenance Every Time You Cook
- WEBER CONNECT App
- Connecting Your Grill to Bluetooth® or Wi-Fi Network

11 Grill Operation
- First Time Startup Procedure
- Every Time You Cook
- Cooking With Temperature Probes
- Shutting Down Your Grill
- Changing Pellets / Purging Hopper
- Grilling Methods
- Explore Your Settings

15 Controller Settings
- Dashboard
- Main Menu
- Setting Up a Probed Cook
- Probed Cook Settings
- Cook Programs
- Timers
- Regulatory Information

17 Troubleshooting

32 Maintenance

33 Grillmaster Tips

34 Replacement Parts

WARRANTY

Welcome to WEBER

WEBER is proud to have you with us as you explore all of your future grilling experiences. We pride ourselves on two things; making grills that last and providing quality customer service care for a lifetime. Our commitment to excellence and quality is unmatched and we stand by our products with a world class warranty. Feel confident in your decision to buy a WEBER and enjoy your journey to grilling happiness.

Limited Warranty

Thank you for purchasing a WEBER product. Weber-Stephen Products LLC, 1415 S. Roselle Road, Palatine, Illinois 60067 ("WEBER") prides itself on delivering a safe, durable, and reliable product.
This is WEBER's Limited Warranty ("Warranty") provided to you at no extra charge. It contains the information you will need to have your WEBER product repaired in the unlikely event of a failure or defect.
Pursuant to applicable laws, the customer has several rights in case the product is defective. Those rights include supplementary performance or replacement, abatement of the purchasing price, and compensation. These and other statutory rights remain unaffected by this warranty provision. In fact, this warranty grants additional rights to the Owner that are independent from statutory warranty provisions.

WEBER'S LIMITED WARRANTY

WEBER warrants, to the purchaser of the WEBER product (or in the case of a gift or promotional situation, the person for whom it was purchased as a gift or promotional item) ("Owner"), that the WEBER product is free from defects in material and workmanship for the period(s) of time specified below when assembled and operated in accordance with the accompanying Owner's Manual, normal wear and tear excluded . (Note: If you lose or misplace your WEBER Owner's Manual, a replacement is available online at www.weber.com.) WEBER agrees within the framework of this warranty to repair or replace the part that is defective in material or workmanship subject to the limitations, and exclusions listed below. TO THE EXTENT ALLOWABLE BY APPLICABLE LAW, THIS WARRANTY IS EXTENDED ONLY TO THE ORIGINAL PURCHASER AND IS NOT TRANSFERABLE TO SUBSEQUENT OWNERS, EXCEPT IN THE CASE OF GIFTS AND PROMOTIONAL ITEMS AS NOTED ABOVE.
WEBER stands by its products and is happy to provide you with the Warranty described for material defects in the grill or its relevant components, normal wear and tear excepted.

- 'Normal wear and tear' includes cosmetic and other immaterial deterioration that may come with ownership of your grill over time, such as surface rust, dents / scratches, etc.

However, WEBER will honor this Warranty for the grill or its relevant components where damage or dysfunction results from a material defect.

- 'Material defect' includes rust through or burn through of certain parts, or other damage or failure inhibiting your ability to safely / properly use your grill.

OWNER'S RESPONSIBILITIES UNDER THIS WARRANTY

To ensure trouble-free warranty coverage, it is important (but it is not required) that you register your WEBER product online at www.weber.com. Please also retain your original sales receipt and/or invoice. Registering your WEBER product confirms your warranty coverage and provides a direct link between you and WEBER in case we need to contact you. If you have not had time to register your grill before calling for Warranty service, please have the following information available when you do call:
Name – Address – Phone Number – Email – Serial Number – Purchase Date – Purchase Dealer – Model – Color – Primary Issue

The above warranty only applies if the Owner takes reasonable care of the WEBER product by following all assembly instructions, usage instructions, and preventative maintenance as outlined in the accompanying Owner's Manual, unless the Owner can prove that the defect or failure is independent of non-compliance with the above mentioned obligations. If you live in a coastal area, or have your product located near a pool, maintenance includes regular washing and rinsing of the exterior surfaces as outlined in the accompanying Owner's Manual.

WARRANTY HANDLING / EXCLUSION OF WARRANTY

If you believe that you have a part which is covered by this Warranty, please contact WEBER Customer Service using the contact information on our website (www.weber.com, or such country-specific website to which Owner may be redirected). WEBER will, upon investigation, repair or replace (at its option) a defective part that is covered by this Warranty. In the event that repair or replacement are not possible, WEBER may choose (at its option) to replace the grill in question with a new grill of equal or greater value. WEBER may ask you to return parts for inspection, shipping charges to be pre-paid by owner.
When you contact Customer Service, please have the following information available:
Name – Address – Phone Number – Email – Serial Number – Purchase Date – Purchase Dealer – Model – Color – Primary Issue

This WARRANTY lapses if there are damages, deteriorations, discolorations, and/or rust for which WEBER is not responsible caused by:

- Abuse, misuse, alteration, modification, misapplication, vandalism, neglect, improper assembly or installation, and failure to properly perform normal and routine maintenance;
- Insects (such as spiders) and rodents (such as squirrels), including but not limited to damage to burner tubes and/or gas hoses;
- Exposure to salt air and/or chlorine sources such as swimming pools and hot tubs/spas;
- Severe weather conditions such as hail, hurricanes, earthquakes, tsunamis or surges, tornadoes or severe storms.
- Acid rain and other environmental factors.

Using third party parts will not void this Warranty. However, any parts that are used and/or installed on your WEBER product that are not genuine WEBER parts are not covered by this Warranty. In addition, any damages that result from the use and/or installation of parts on your WEBER product that are not genuine WEBER parts are not covered by this Warranty. Any conversion of a gas grill not authorized by WEBER and performed by a WEBER authorized service technician will void this Warranty.

PRODUCT WARRANTY PERIODS

Cook box and all components not covered below:
5 years

Electrical components:
3 years

Cooking grates, pellet slide, burn pot, heat baffle, pellet grate, controller bezel:
3 years

DISCLAIMERS

APART FROM THE WARRANTY AND DISCLAIMERS AS DESCRIBED IN THIS WARRANTY STATEMENT, THERE ARE EXPLICITLY NO FURTHER WARRANTY OR VOLUNTARY DECLARATIONS OF LIABILITY GIVEN HERE WHICH GO BEYOND THE STATUTORY LIABILITY APPLYING TO WEBER. THE PRESENT WARRANTY STATEMENT ALSO DOES NOT LIMIT OR EXCLUDE SITUATIONS OR CLAIMS WHERE WEBER HAS MANDATORY LIABILITY AS PRESCRIBED BY STATUTE.
NO WARRANTIES SHALL APPLY AFTER THE APPLICABLE PERIODS OF THIS WARRANTY. NO OTHER WARRANTIES GIVEN BY ANY PERSON, INCLUDING A DEALER OR RETAILER, WITH RESPECT TO ANY PRODUCT (SUCH AS ANY "EXTENDED WARRANTIES"), SHALL BIND WEBER. THE EXCLUSIVE REMEDY OF THIS WARRANTY IS REPAIR OR REPLACEMENT OF THE PART OR PRODUCT.
IN NO EVENT UNDER THIS WARRANTY SHALL RECOVERY OF ANY KIND BE GREATER THAN THE AMOUNT OF THE PURCHASE PRICE OF THE WEBER PRODUCT SOLD.
YOU ASSUME THE RISK AND LIABILITY FOR LOSS, DAMAGE, OR INJURY TO YOU AND YOUR PROPERTY AND/OR TO OTHERS AND THEIR PROPERTY ARISING OUT OF THE MISUSE OR ABUSE OF THE PRODUCT OR FAILURE TO FOLLOW INSTRUCTIONS PROVIDED BY WEBER IN THE ACCOMPANYING OWNER'S MANUAL.
PARTS AND ACCESSORIES REPLACED UNDER THIS WARRANTY ARE WARRANTED ONLY FOR THE BALANCE OF THE ABOVE MENTIONED ORIGINAL WARRANTY PERIOD(S).
THIS WARRANTY APPLIES TO PRIVATE SINGLE FAMILY HOME OR APARTMENT USE ONLY AND DOES NOT APPLY TO WEBER GRILLS USED IN COMMERCIAL, COMMUNAL OR MULTI-UNIT SETTINGS SUCH AS RESTAURANTS, HOTELS, RESORTS, OR RENTAL PROPERTIES.
WEBER MAY FROM TIME TO TIME CHANGE THE DESIGN OF ITS PRODUCTS. NOTHING CONTAINED IN THIS WARRANTY SHALL BE CONSTRUED AS OBLIGATING WEBER TO INCORPORATE SUCH DESIGN CHANGES INTO PREVIOUSLY MANUFACTURED PRODUCTS, NOR SHALL SUCH CHANGES BE CONSTRUED AS AN ADMISSION THAT PREVIOUS DESIGNS WERE DEFECTIVE.

Weber-Stephen Products LLC
Customer Service Center
1415 S. Roselle Road
Palatine, IL 60067
U.S.A.

For replacement parts, call:
1-800-446-1071

Disclaimers

APART FROM THE WARRANTY AND DISCLAIMERS AS DESCRIBED IN THIS WARRANTY STATEMENT, THERE ARE EXPLICITLY NO FURTHER WARRANTY OR VOLUNTARY DECLARATIONS OF LIABILITY GIVEN HERE WHICH GO BEYOND THE STATUTORY LIABILITY APPLYING TO WEBER. THE PRESENT WARRANTY STATEMENT ALSO DOES NOT LIMIT OR EXCLUDE SITUATIONS OR CLAIMS WHERE WEBER HAS MANDATORY LIABILITY AS PRESCRIBED BY STATUTE.

NO WARRANTIES SHALL APPLY AFTER THE PERIODS OF THIS WARRANTY STATED ABOVE. NO OTHER WARRANTIES GIVEN BY ANY PERSON, INCLUDING A DEALER OR RETAILER, WITH RESPECT TO ANY PRODUCT (SUCH AS ANY "EXTENDED WARRANTIES"), SHALL BIND WEBER. THE EXCLUSIVE REMEDY OF THIS WARRANTY IS REPAIR OR REPLACEMENT OF THE PART OR PRODUCT.

IN NO EVENT UNDER THIS VOLUNTARY WARRANTY SHALL RECOVERY OF ANY KIND BE GREATER THAN THE AMOUNT OF THE PURCHASE PRICE OF THE WEBER PRODUCT SOLD.

YOU ASSUME THE RISK AND LIABILITY FOR LOSS, DAMAGE, OR INJURY TO YOU AND YOUR PROPERTY AND/OR TO OTHERS AND THEIR PROPERTY ARISING OUT OF THE MISUSE OR ABUSE OF THE PRODUCT OR FAILURE TO FOLLOW INSTRUCTIONS PROVIDED BY WEBER IN THE ACCOMPANYING OWNER'S MANUAL.

PARTS AND ACCESSORIES REPLACED UNDER THIS WARRANTY ARE WARRANTED ONLY FOR THE BALANCE OF THE ABOVE MENTIONED WARRANTY PERIODS.

THIS WARRANTY APPLIES TO PRIVATE SINGLE FAMILY HOME OR APARTMENT USE ONLY AND DOES NOT APPLY TO WEBER GRILLS USED IN COMMERCIAL, COMMUNAL OR MULTI-UNIT SETTINGS SUCH AS RESTAURANTS, HOTELS, RESORTS, OR RENTAL PROPERTIES.

WEBER MAY FROM TIME TO TIME CHANGE THE DESIGN OF ITS PRODUCTS. NOTHING CONTAINED IN THIS WARRANTY SHALL BE CONSTRUED AS OBLIGATING WEBER TO INCORPORATE SUCH DESIGN CHANGES INTO PREVIOUSLY MANUFACTURED PRODUCTS, NOR SHALL SUCH CHANGES BE CONSTRUED AS AN ADMISSION THAT PREVIOUS DESIGNS WERE DEFECTIVE.

Weber-Stephen Products LLC
Customer Service Center
1415 S. Roselle Road
Palatine, IL 60067
U.S.A.

For replacement parts, call:
1-800-446-1071

A Porcelain Enameled Lid and Cookbox

Built to outlast the competition, SMOKEFIRE's shine goes far beyond looks. The exclusive WEBER Porcelain-Enameled finish withstands the elements and helps prevent rusting and cracking over time.

B Large Hopper

The large capacity hopper holds an entire 20 pound bag of pellets, and then some - perfect size for all day smoking.

C Responsive Incline Drive Engine

This DC powered engine was built to heat hotter and faster than most pellet grills in order to reach a 200°-600°F (93°-315°C) temperature range. This gives you the versatility to sear steaks, smoke BBQ ribs, bake pizza, and everything in between.

D Easy-Clean Ash and Grease System

With superior ash and grease removal, the ash and grease are channeled into an external, contained drawer for a quick and easy cleanup. This means not having to look at all that nasty grease in a bucket hanging from the side of your beautiful new pellet grill. This unique system also prevents ash from blowing up into the cookbox and onto your food.

E Large Grilling Area

Two large levels of cooking space will hold enough food to feed everyone at the party.

F Glow Plug Ignition

The glow plug provides ignition for the fuel in your pellet grill, similar to a heating element in a electric oven.

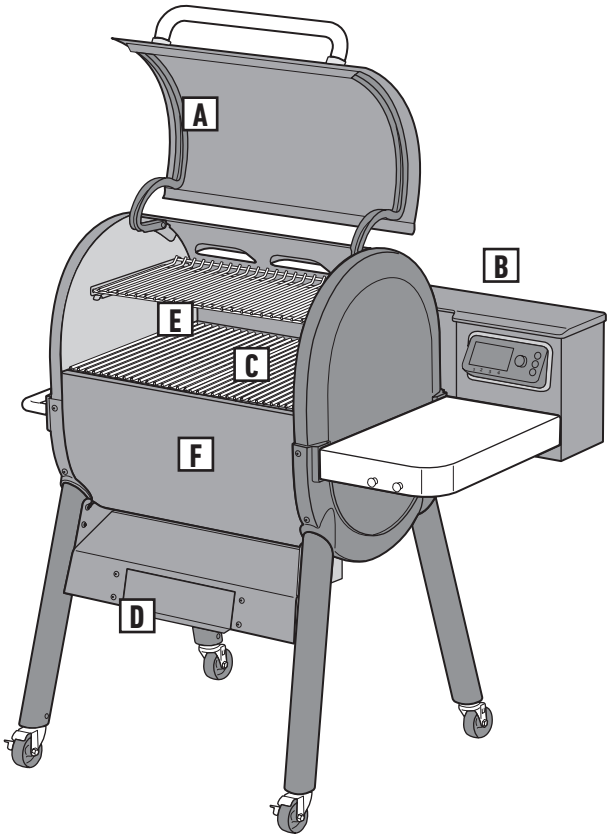

SPECIAL FEATURES

A WEBER CONNECT Controller

The WEBER CONNECT controller **(A)** gives you complete control over how your WEBER SMOKEFIRE grill operates. Use the controller to start up your grill, select temperature settings, monitor your cook, and more. Explore more options within the main menu of the controller.

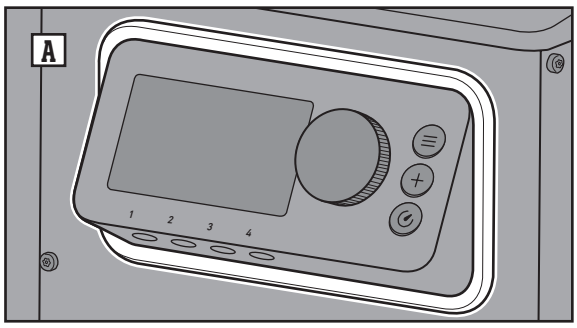

B Integrated Wi-Fi and Bluetooth®

Using your smartphone, login to the WEBER CONNECT app **(B)** to get the latest software and connect to your grill. The WEBER CONNECT app tells you when it's time to flip, rest, and serve directly from your smartphone. The remote grilling access feature gives you the freedom to walk away, monitor, and even adjust the heat from the palm of your hand.

C FLAVORIZER Bars and Heat Diffuser

The FLAVORIZER bars and heat diffuser **(C)** direct heat to every inch of the cooking grate so that your entire meal cooks evenly, with no worry of hot or cold spots. While grilling at high heat, drippings are also caught and sizzle, creating an amazing boost of flavor.

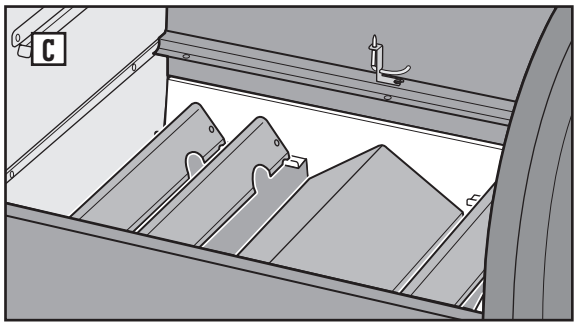

D Ambient and Food Temperature Probes

In order to remotely monitor your grill temperature and internal food temperatures, your SMOKEFIRE grill comes with an attached ambient temperature probe and a food temperature probe **(D)** that will directly connect and interact with the controller (the controller can hold up to 4 separate food temperature probes sold separately).

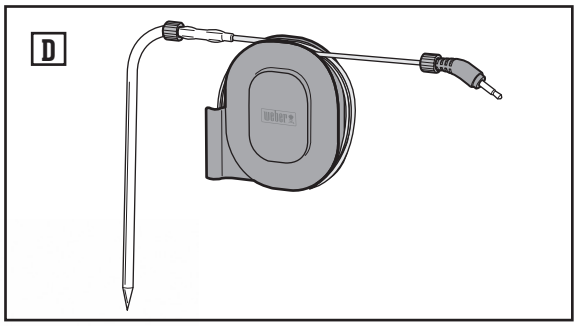

E Large Side Table with Tool Hooks

Use the side table **(E)** to keep platters, seasonings, and tools within arm's reach, or use it as a workspace for prep. The tool hooks are also a great place to hang your grilling tools for when you need them.

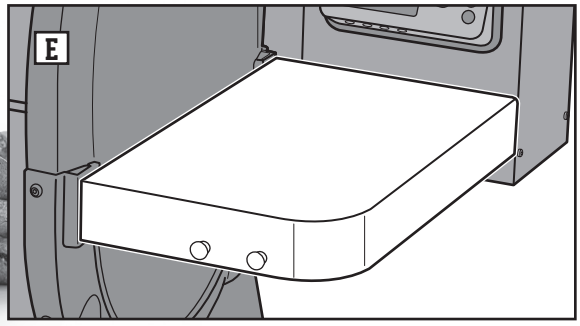

F Accessories

Add on to your SMOKEFIRE grill to customize your grilling experience. Visit www.weber.com to find all of your favorite WEBER accessories.

WEBER CONNECT CONTROLLER

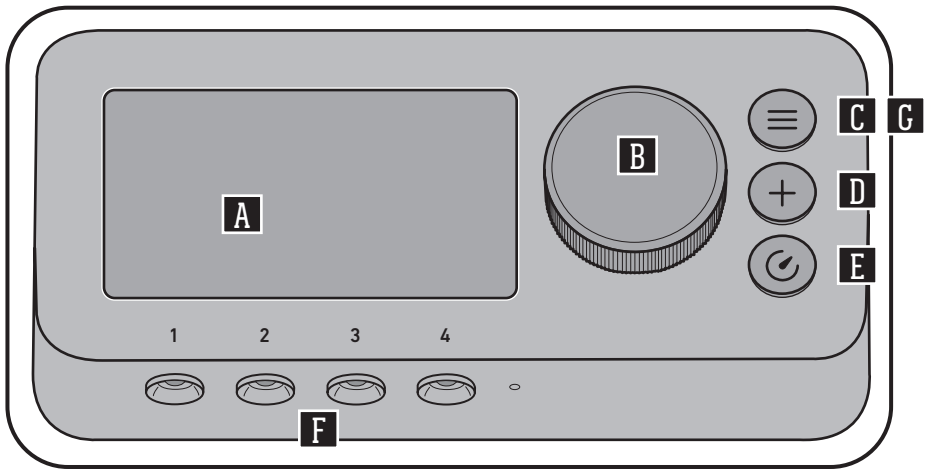

A Dashboard

The LCD display dashboard on your controller is where you can visually check temperatures, receive notifications, view connectivity status, explore menu options, and check the status of your cook.

B Selection Dial

Turn the selection dial to adjust grill temperature, navigate through the dashboard, select menu options, and more. Push the dial to confirm a selection. Push and hold the dial to initiate the shutdown procedure.

C Main Menu / Back

From the dashboard, pressing the button takes you to the main menu. As you navigate through menu options using the dial, pressing the button again will take you one step back. Press and hold the button to return to the dashboard. From the main menu, pushing the button takes you back to the dashboard.

D Cook Program

Push the button to engage with WEBER cook programs such as fish, poultry, red meat, vegetables, and more. Download the WEBER CONNECT app using your smartphone to follow the programed grilling steps displayed on the controller and on your app.

E Timer

Push the button to start a new timer. Use the dial to increase or decrease the desired amount of time. Push the dial to select and start your timer.

F Food Temperature Probes

Your new WEBER SMOKEFIRE grill can handle up to four separate food temperature probes (one probe included) to gain superior control over your grill for perfect results every time.

G SMOKEBOOST

A flavor mode that adds an extra kick of smoky, wood fired taste to your food for low and slow cooks.

NOTE: Download the WEBER CONNECT app to get the latest grill software and controller features.

BEFORE IGNITING

Choose A Proper Location To Cook

In order to ensure a safe and enjoyable grilling experience, it is important to remember these rules when choosing a location for your WEBER SMOKEFIRE:

- Do not use indoors! This grill is designed for outdoor use in a well-ventilated area and is not intended for and should never be used as a heater. If used indoors, toxic fumes will accumulate and cause serious bodily injury or death.
- Do not use in a garage, building, breezeway, tent, or any other enclosed area.
- Do not use this grill within 2 feet (70 cm) of any combustible material. Combustible materials include, but are not limited to, wood or treated wood decks, patios, and porches.
- Keep the cooking area clear of flammable vapor and liquids, such as gasoline, alcohol, etc.
- Do not use this grill under any overhead combustible construction including ceilings, overhangs, a lanai or screened in porch.
- Do not use the grill within 10 feet (3.05 m) of any body of water, such as a pool or pond.
- Do not use the grill in a confined and/or habitable space e.g. houses, tents, caravans, motor homes, boats. Danger of carbon monoxide poisoning fatality.
- Always store WEBER SMOKEFIRE ALL NATURAL HARDWOOD PELLETS in a dry place located away from heat-producing appliances and moisture.

Preparing Grill For First Time Startup

Before the first startup of your WEBER SMOKEFIRE grill, there are some necessary steps to be followed:

1. Remove all packaging materials from the grill.
2. Open the grill lid and make sure the heat baffle, heat diffuser, FLAVORIZER bars and cooking grates are properly installed inside the cookbox **(A)**.
3. Plug the power cord into the bottom of the hopper before plugging it into a grounded electrical outlet. With the power supply switch in the off position, plug your grill into a grounded outlet **(B)**.
4. Open the hopper lid and check the bottom inside of the hopper to ensure there are no foreign objects obstructing the auger and that the hopper finger safety guard is in place. **(C)**.

NOTE: Make sure the hopper slide door is closed before filling the hopper with pellets.

5. Fill the hopper with your choice of WEBER SMOKEFIRE ALL NATURAL HARDWOOD PELLETS **(D)**. Close the hopper lid when filled.
6. Turn the power supply switch, located on the bottom of the hopper, to the ON position **(E)**.

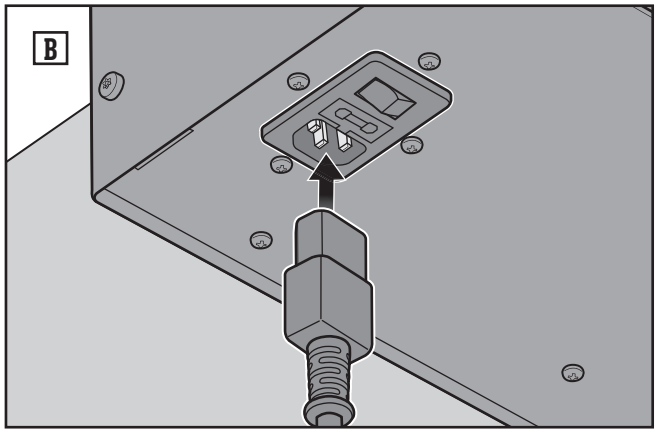

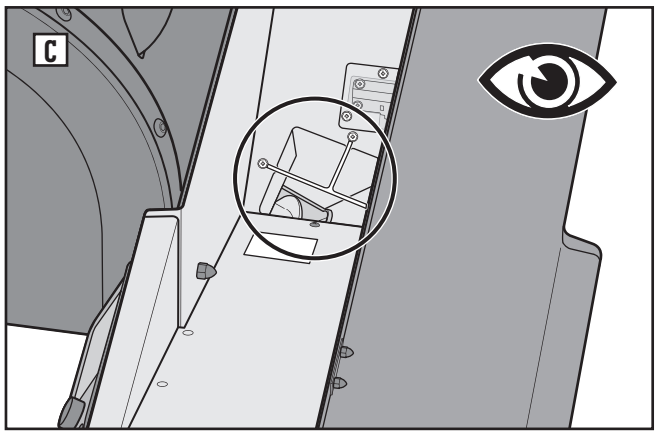

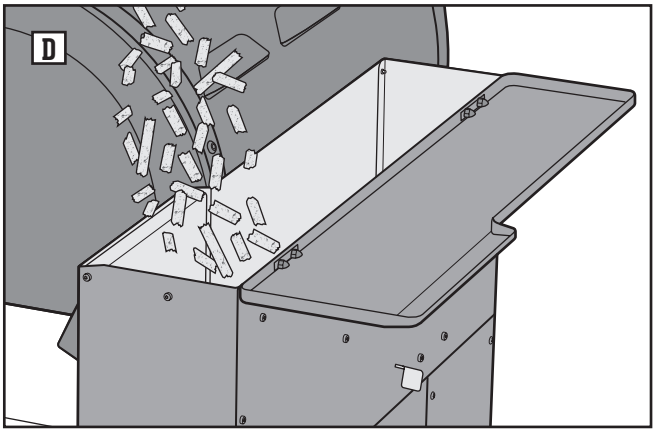

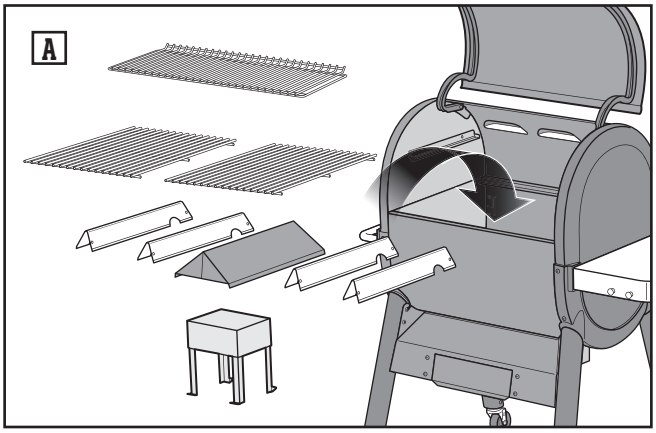

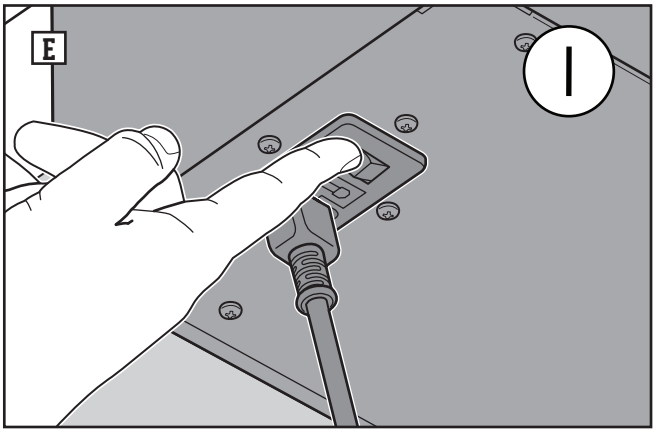

Meal to Meal Maintenance Every Time You Cook

To ensure that your WEBER SMOKEFIRE grill operates safely and smoothly every time you start it up, here are some steps to follow before you start grilling:

1. Visually check the cookbox and clean the ash and grease system drawer before every cook **(A)**. If the disposable drip pan has grease in it, discard it and replace with a new one.

NOTE: ALWAYS USE A DISPOSABLE DRIP PAN INSIDE THE ASH AND GREASE SYSTEM DRAWER.

WARNING: DO NOT REMOVE THE ASH AND GREASE SYSTEM DRAWER WHILE OPERATING THE GRILL, OR IF STILL HOT AFTER SHUTDOWN. Frequently replace the disposable drip pan before igniting the grill to reduce the risk of a grease fire.

2. Make sure the hopper is filled with your choice of WEBER SMOKEFIRE ALL NATURAL HARDWOOD PELLETS **(B)**.
3. Check that the power cord is connected to the bottom of the hopper before plugging it into an electrical outlet **(C)**.

⚠ **WARNING!** Keep the power cord and extension cord away from any heated surfaces or water and arranged so as not to cause a tripping hazard. Use the power cord management strap to avoid these hazards **(D)**.

4. Turn the power supply switch, located on the bottom of the hopper, to the on position **(E)**.

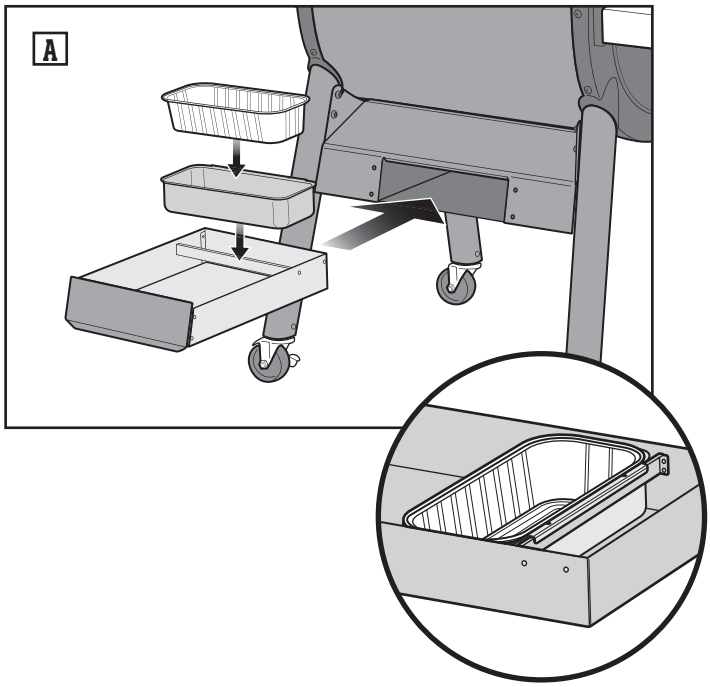

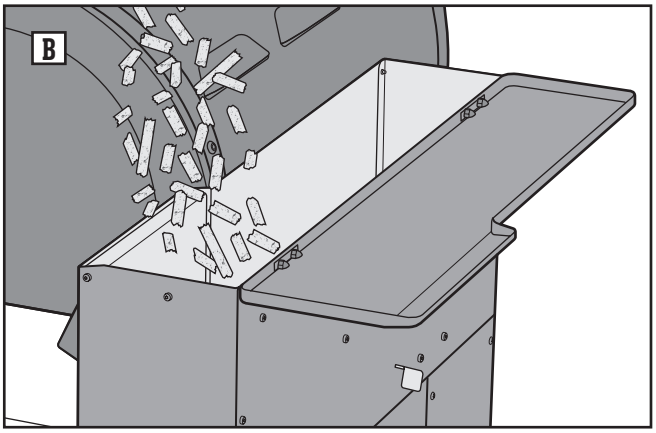

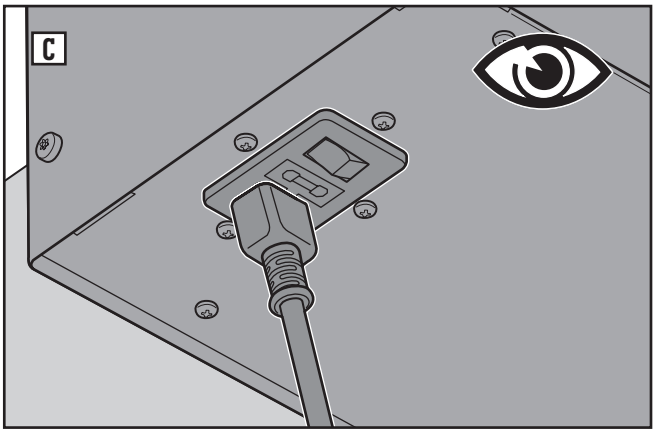

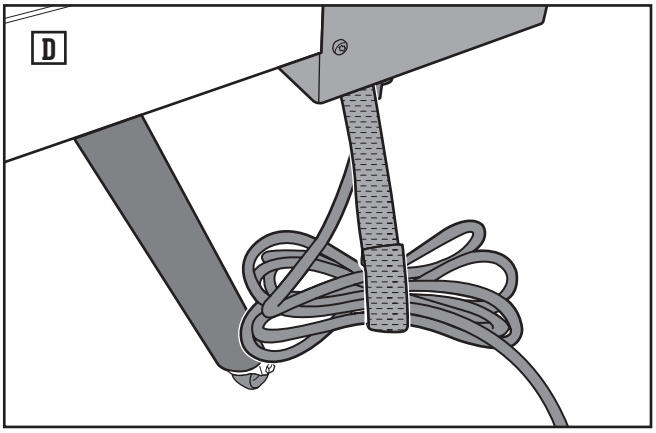

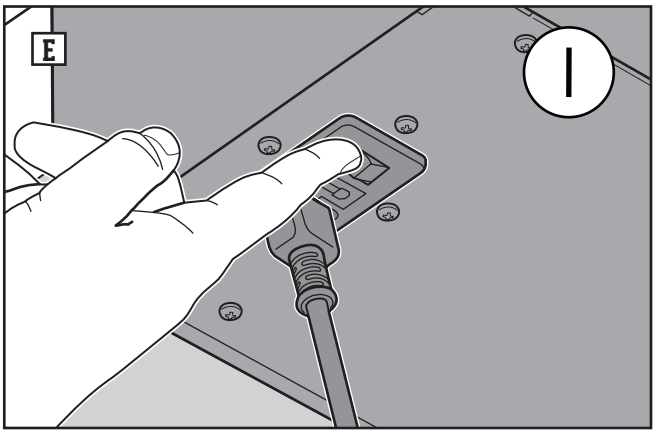

BEFORE IGNITING

WEBER CONNECT App

First things first.

Download the WEBER CONNECT app.

To fully activate and update your new WEBER CONNECT controller, it is important to first download the WEBER CONNECT app.

Download, connect and register to receive:

- Flip and Serve Notifications
- Food Readiness Countdowns
- Custom Food Doneness Alerts
- Step-by-step Grilling Assistance

Connecting Your Grill To Bluetooth® or Wi-Fi Network

To connect your WEBER SMOKEFIRE grill via Bluetooth® or your local Wi-Fi network, follow these steps:

NOTE: WEBER recommends that your smartphone be running the latest version of its operating system before attempting to connect your grill to Bluetooth® or your Wi-Fi network.

1. Turn on the grill's power supply switch located under the hopper.
2. Verify that your smartphone is connected to Bluetooth® or your local Wi-Fi network.
3. From your smartphone, download the WEBER CONNECT app from the App Store on Apple smartphones, or the Play Store on Android smartphones.
4. Open the WEBER CONNECT app and follow the in-app instructions for connecting to your SMOKEFIRE grill.

NOTE: In order to successfully connect your smartphone to your grill via a local Wi-Fi network, first make sure your grill is paired via Bluetooth® and that your grill is within range of your Wi-Fi router. If your attempts to connect have been unsuccessful, try moving the grill within range of the Wi-Fi router or adding a signal extender for a stronger signal. Be sure to locate the grill at least 2 feet away from any combustible materials and flammable liquids.

Remote Temperature Control

Whether prepping dessert from the kitchen or relaxing in the sun, you can now adjust the temperature of SMOKEFIRE from wherever you are.

Remote Barbecue Shut Down

Whether setting the table, or way too comfortable on the couch, you can now shut down SMOKEFIRE from wherever you are.

SMOKEBOOST

A flavor mode that adds an extra kick of smoky, wood fired taste to your food for low & slow cooks. Use at the start of a low & slow cook with food such as brisket, pork shoulder, poultry, and fish that will be smoked at low temps. When activated, it cools and adjusts to a temperature range between 165°-200°F (74°-93°C), dependent on ambient condition.

First Time Startup Procedure

Once all of the setup steps have been followed in the previous section, *BEFORE IGNITING*, you can now initiate the startup procedure to preheat your SMOKEFIRE grill for the first time.

NOTE: If this is the very first time starting your SMOKEFIRE grill, WEBER recommends that you season your grill at 450°F (230°C) for at least 30 to 40 minutes with the grill lid closed.

Please follow these steps the very first time you ignite your grill:

1. Make sure the hopper is filled with your choice of WEBER SMOKEFIRE ALL NATURAL HARDWOOD PELLETS **(A)**.
2. Open the grill lid.
3. Using the dial on the controller, select *450°F (230°C)*, and push the dial to select it **(B)**.

NOTE: Do not push and hold the dial as it will begin the shutdown procedure.

4. Once smoke becomes visible, close the grill lid and let the grill run for at least 30 to 40 minutes to season your grill **(C)**.
5. When the grill has been seasoned, open the grill lid and clean the cooking grates using a grill brush or wood scraper **(D)**.
6. With the grill lid open, push and hold the dial to shutdown your grill. Alternatively, you can push the main menu button ☰. Using the dial on the controller, scroll through the main menu and push to select "*Shutdown*".
7. Once your grill has completed a proper shut down and completely cooled, power off the grill and unplug from the power source.

WARNING: ALWAYS MAKE SURE THE GRILL IS COMPLETELY COOLED AND UNPLUGGED FROM A POWER SOURCE BEFORE PERFORMING ANY MAINTENANCE OR CLEANING.

8. Remove internal grill components and clean your cookbox by pushing the ash into the ash and grease system drawer with the provided WEBER scraper. Follow the *"RECOMMENDED CLEANING"* section at the rear of this Owner's Guide for additional tips.
9. Now that your grill is cleaned and all internal grill components are properly reinstalled, you can start cooking, connect food temperature probes, start a timer, or select a cook program, all from the controller.

Every Time You Cook

Once all of the setup steps have been followed in the previous section, *BEFORE LIGHTING*, you can now initiate the startup procedure to preheat your grill.

Please follow these steps every time you operate your SMOKEFIRE grill:

1. Make sure the hopper is filled with your choice of WEBER SMOKEFIRE ALL NATURAL HARDWOOD PELLETS **(A).**
2. Clean any ash or grease from the ash and grease system drawer.
3. Open the grill lid.
4. Using the dial on the controller, select your desired temperature and push the dial to select it **(B)**.

NOTE: Do not push and hold the dial as it will begin the shutdown procedure.

5. Once smoke becomes visible, close the grill lid and let the grill preheat to the selected temperature **(C)**.
6. When the grill has been preheated, open the grill lid and clean the cooking grates using a grill brush or wood scraper **(D)**.

NOTE: WEBER recommends always cooking with the grill lid closed and letting your grill preheat before cleaning your cooking grates.

7. Start grilling! You can now connect food temperature probes, start a timer, or select a cook program all from the controller.

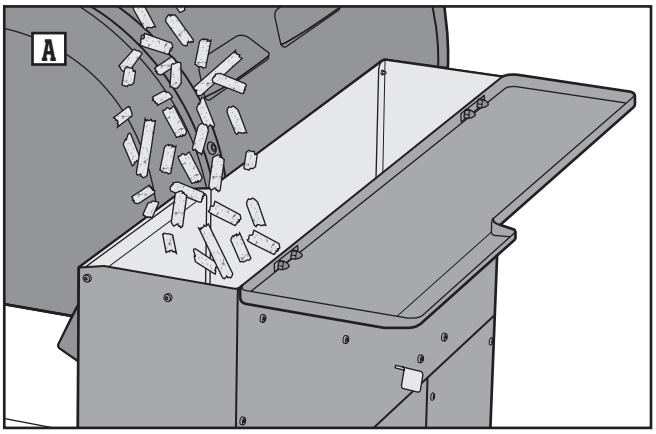

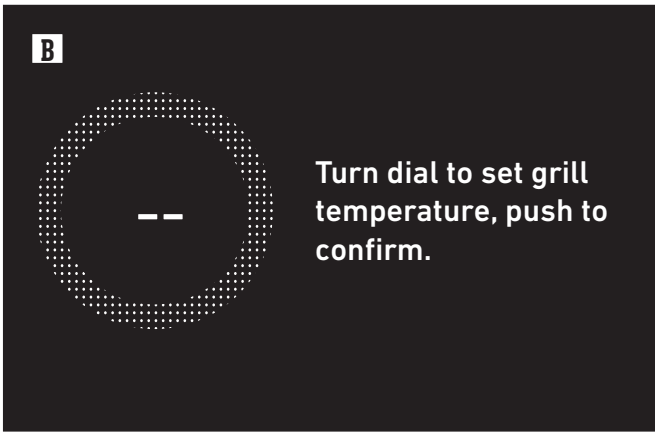

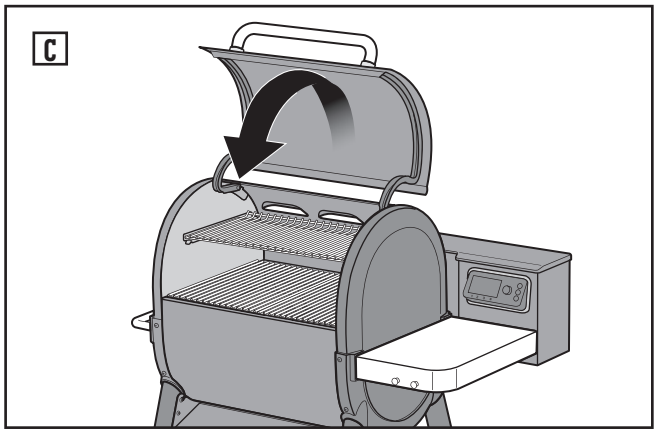

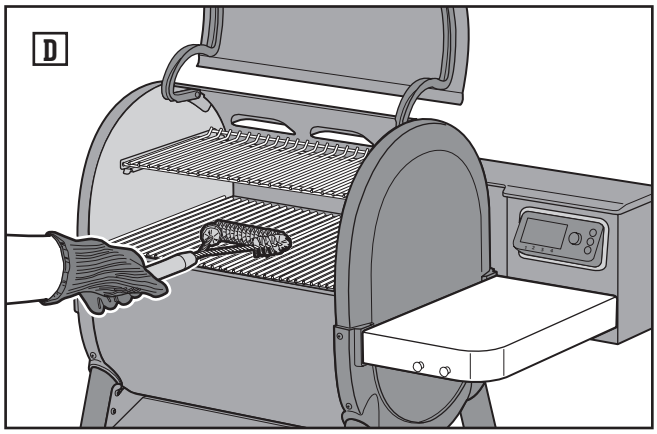

GRILL OPERATION

Cooking with Temperature Probes

Use the included food temperature probe to gain complete control of your WEBER SMOKEFIRE for the perfect food, every time.

WARNING: Handling the food temperature probes without hand protection will result in severe burns. Always wear heat protective barbecue mitts or gloves when handling temperature probes.

Please follow these steps for using food temperature probes:

1. Once the grill has been preheated, open the grill lid and clean the cooking grates using a grill brush or wood scraper **(A)**, then place your food on the grates.
2. Plug the food temperature probe(s) into the bottom of the controller and, using heat resistant barbecue mitts or gloves, route the probe(s) between the grill lid and the top of the cookbox **(B)**.
3. Insert food temperature probe(s) into the center of the thickest part of your food **(C)**.
4. Close the grill lid.

NOTE: Be sure to route food temperature probe wires through the channel in the grill lid to avoid damaging them.

5. From the dashboard on the controller display, select the corresponding tile to set a desired food temperature or select a cook program for each food temperature probe **(D)**. Simply turn the dial left or right to navigate through menu options until the desired settings are displayed, then push the dial to select. On the controller display, and when connected to the WEBER CONNECT app, you will receive a notification when your food has reached the set temperature(s).

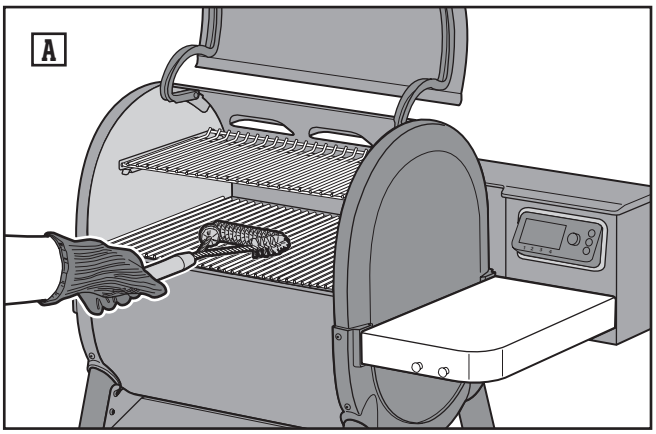

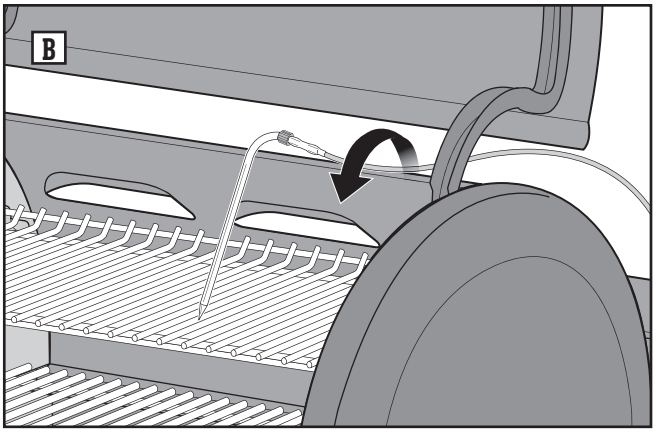

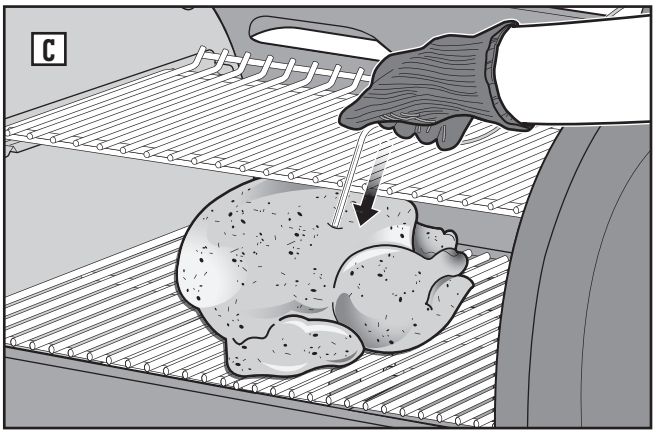

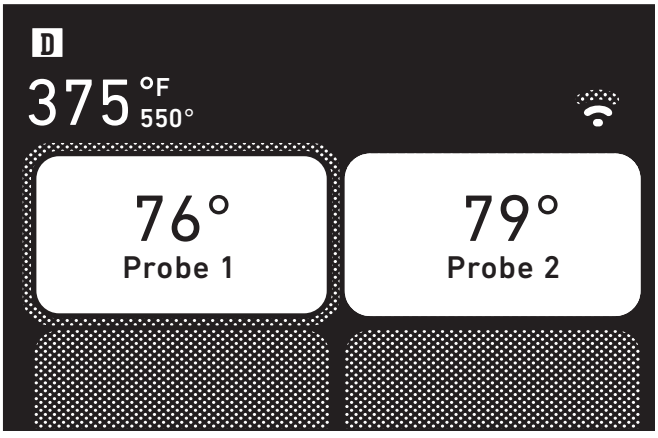

Shutting Down Your Grill

When your cook has ended, your WEBER SMOKEFIRE must be properly powered down to clear the auger and burn pot of any remaining pellets and ashes. This helps your grill be ready to go the next time you want to start it up.

Please follow these steps to properly shut down your WEBER SMOKEFIRE:

1. When your food is cooked to your desired internal temperature, using heat resistant barbecue mitts or gloves, open the grill lid, remove and unplug any food temperature probes from the food and cookbox, and remove all food off of the cooking grates **(A)**.

WARNING: Food temperature probes, grill handles and grill surfaces will be hot. Always use heat resistant barbecue mitts or gloves before handling, cleaning, moving, or storing the grill or its parts.

NOTE: For food temperature probe cleaning instructions, see the MAINTENANCE section later in this manual.

2. With the grill lid open, push and hold the dial to shutdown your grill **(B)**. Alternatively, you can push the main menu button ☰. Using the dial on the controller, scroll through the main menu and push to select "*Shutdown*".

CAUTION: Always engage the shutdown *procedure with the grill lid open to properly shutdown your grill when finished cooking. Frequently interrupted cook cycles could cause component failure.*

3. Your SMOKEFIRE grill will run through a series of steps in order to properly and safely shutdown your grill. Once the shutdown procedure is complete and the grill has cooled, power off your grill **(C)** and unplug from the power source.
4. Close the grill lid **(D).**

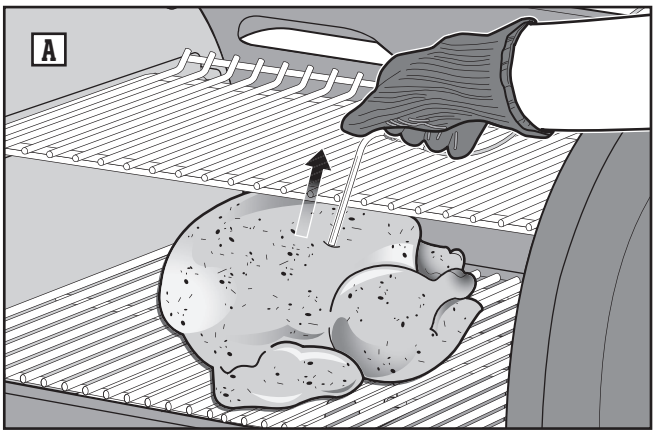

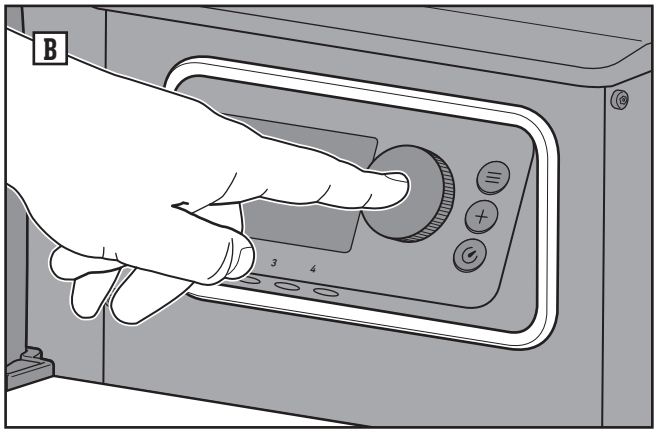

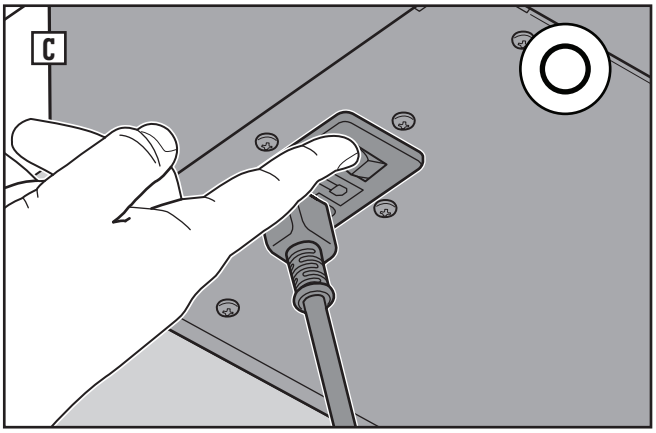

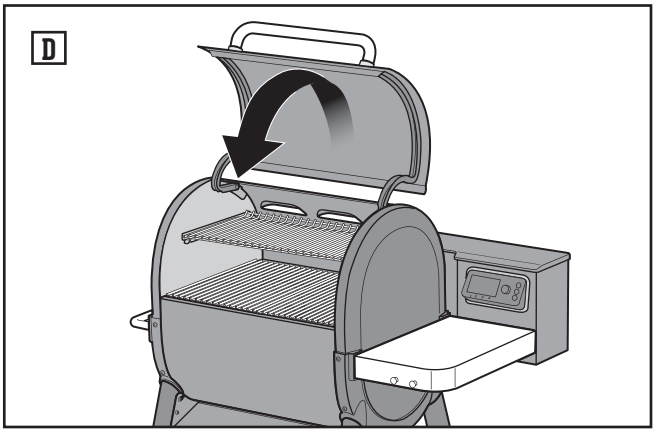

GRILL OPERATION

Changing Pellets/Purging Hopper

There may be times when you want to change the WEBER SMOKEFIRE ALL NATURAL HARDWOOD PELLET flavor for your next grilling session, or purge the hopper for a thorough cleaning or maintenance.

1. From the rear of your SMOKEFIRE grill, set a large container underneath the middle of the hopper **(A)**.
2. Pull the hopper slide door located on the rear of the hopper to release the pellets into the container below **(B)**.

WARNING: Before filling your hopper with WEBER SMOKEFIRE ALL NATURAL HARDWOOD PELLETS, visually inspect the hopper finger safety guard to ensure it is in place and not damaged **(C)**. *If damaged, immediately contact the Customer Service Representative in your area using the contact information on our website for a replacement.*

We recommend using WEBER SMOKEFIRE ALL NATURAL HARDWOOD PELLETS with your SMOKEFIRE grill. For best results, store your pellets in an air tight container to prevent moisture from impacting pellet performance. Always check the condition of your pellets before grilling. The best way to judge the freshness of pellets is to break one in half. Pellets should break with a snap, not crumble in your hand. Pellets that crumble in your hand may impact the performance of your grill.

Grilling Methods

Your WEBER SMOKEFIRE is capable of many different cooking methods such as grilling, searing, smoking, baking, braising, and roasting. Part of the excitement of pellet grilling is that you get to enjoy all of your favorite recipes infused with real hardwood flavor. This element of flavor can elevate your average meal and make it something extraordinary.

NOTE: When grilling or smoking over a longer period of time, WEBER encourages the use of our large WEBER foil pans between the FLAVORIZER bars and cook grates to catch drippings and grease for easier clean up.

Explore Your Settings

There are many more features to be explored on the controller and the WEBER CONNECT app. From programmable timers to cook programs, there are more reasons to love your WEBER SMOKEFIRE grill. Explore and experiment with all of the possibilities.

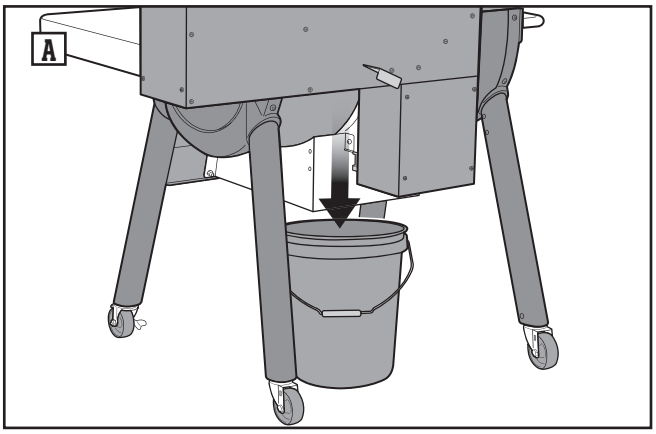

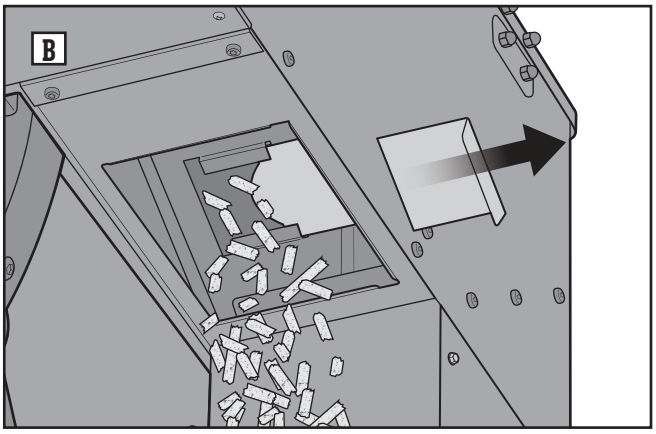

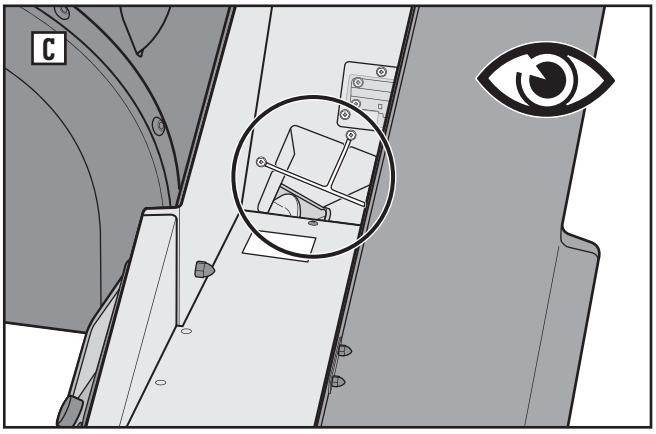

NOTE: Download the WEBER CONNECT app to get the latest grill software and controller features.

Dashboard

The dashboard shows all of the current grill info on the controller display. Here you will find your current and target grill temperature, device connectivity status, and separate tiles that can be setup to display guided cook programs, timers and food temperature probe information.

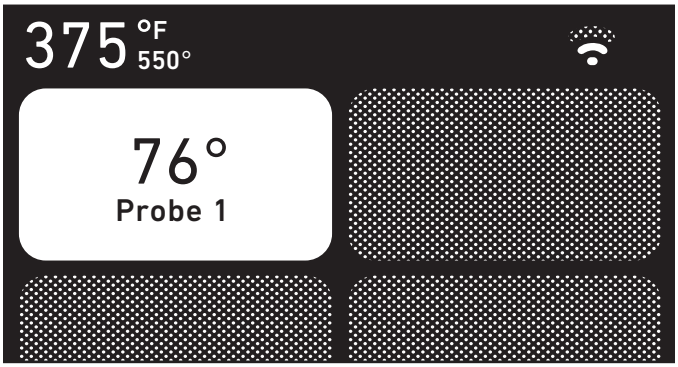

Main Menu

Push the main menu button ☰ to navigate through all of the available settings on the controller. Simply turn the dial and then push it to select your options.

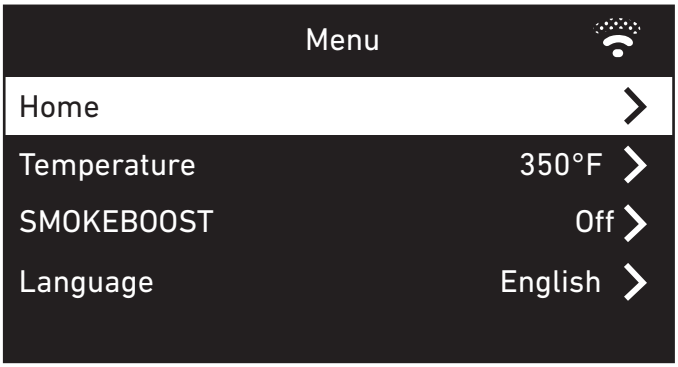

Setting Up A Probed Cook

Once you plug a food temperature probe into any of the four available ports on the controller, turn and push the dial to select the tile that corresponds with the probe number you want to set options for.

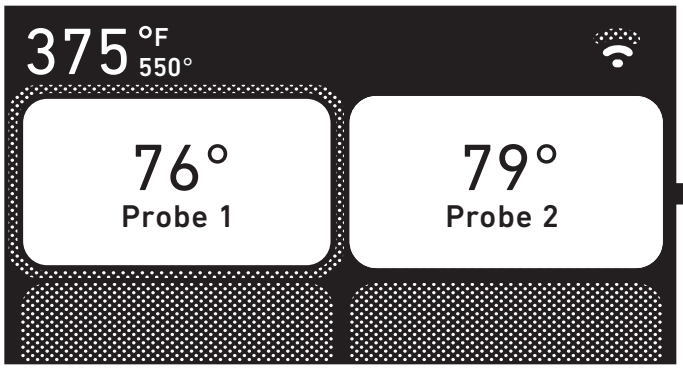

Probed Cook Settings

Once a food temperature probe is selected from the dashboard, you have the option to select a cook program or simply set a temperature alarm to notify you when your food has reached the desired temperature.

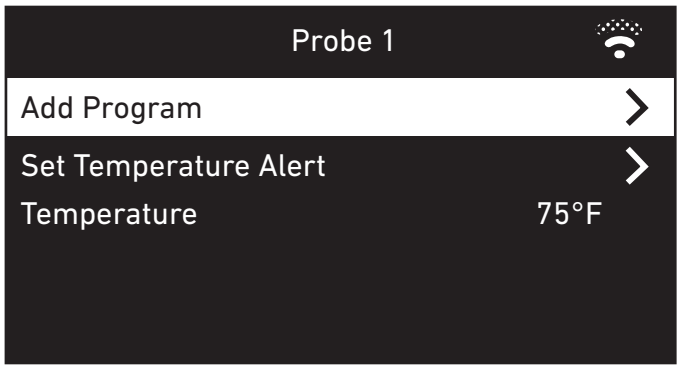

SMOKEBOOST

Add an extra kick of smoky, wood fired taste by selecting SMOKEBOOST on the controller's main menu. SMOKEBOOST is a flavor mode to use at the start of a low & slow cook. When activated, it cools and adjusts to a temperature range between 165°-200° F (74°- 93° C), dependent on ambient condition.

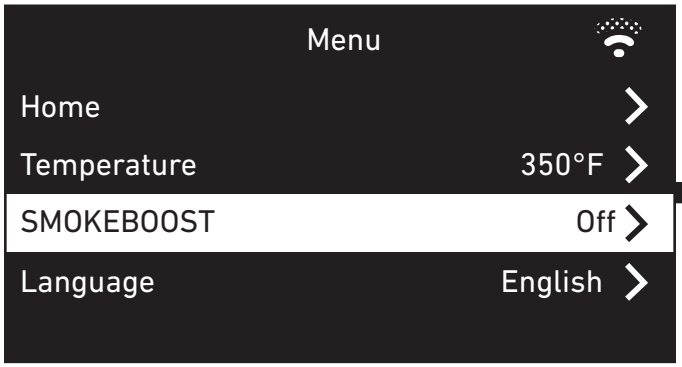

CONTROLLER SETTINGS

Cook Programs

If selecting a guided cook program, push the ⊕ button. Turn and press the dial to select the type of food that you will be cooking. Recently used cook programs will be saved within your controller for quick access to frequently cooked foods.

After selecting your cook program, you can adjust the desired food settings to your personal preference.

NOTE: Some foods will only allow you to select one temperature doneness choice in order to ensure safe food temperatures when the food has completed cooking.

Once all of your desired settings have been chosen, turn and press the dial to select the "Start Cooking" option.

NOTE: When using a guided cook program, you will receive timely tips and notifications throughout your grilling experience to help guide you to perfectly cooked food, every time.

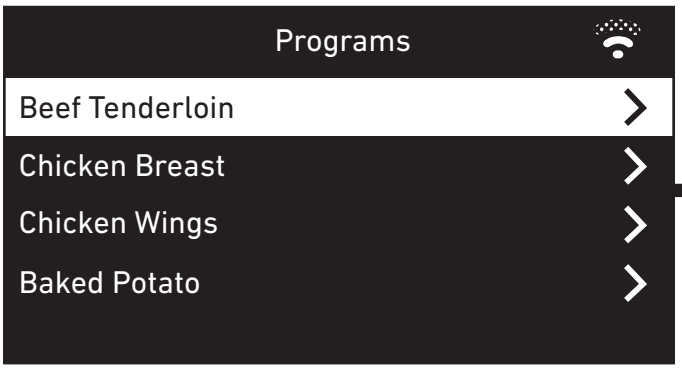

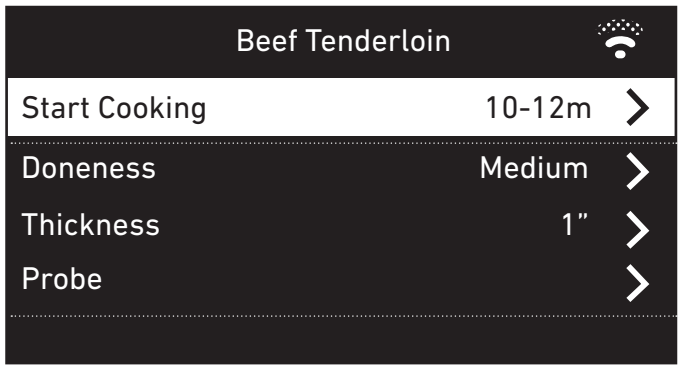

Timers

Press the ⏲ button to add a new timer(s). Turn the dial and press it to select the amount of time desired. From the dashboard or through the main menu, you can select your active timer to adjust the amount of time left or stop it.

Regulatory Information

To access regulatory information, press the ☰ main menu button. Turn and press the dial to select "Regulatory".

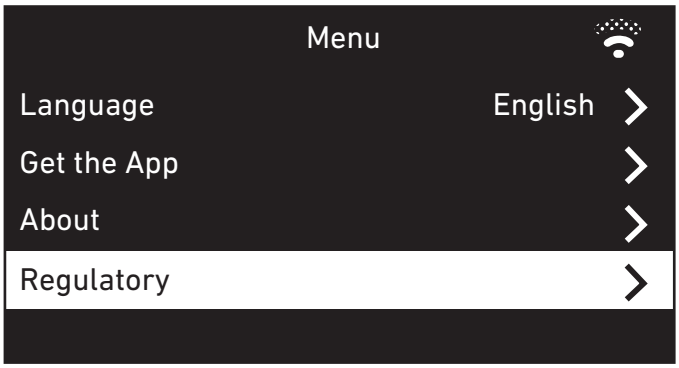

TROUBLESHOOTING

NOTE: Download the WEBER CONNECT app to get the latest grill software and controller features.

The controller uses advanced technology capable of troubleshooting your SMOKEFIRE grill. If a problem is detected with your grill, your controller will display and send an error code to notify you of the error before automatically beginning the necessary procedure. Refer to this troubleshooting section and follow the "*SOLUTION*" column associated with the error code displayed, along with the following instructions to remedy and clear errors.

Error Code	Cause	Solution
E1	Auger Jam	Auger jam has been detected. The grill will attempt to clear the auger jam.
	Auger Jam Cleared or Auger Jam Cannot Be Cleared	1. The grill will automatically run the shutdown procedure if the grill is still hot. Open the grill lid and wait until the grill has completed the shutdown procedure and completely cooled. *CAUTION: Do not unplug the grill or power it off during the shutdown procedure.* 2. Once the shutdown procedure is complete, power off the grill and unplug from power source. 3. Remove the cooking grates, FLAVORIZER bars, heat diffuser, and heat baffle from the cookbox. 4. Clean the cookbox and burn pot of any ash or debris using a grill brush or scraper to direct it into the ash and grease system. *CAUTION: Allow time for the ash and debris to fully extinguish before cleaning the grill.* 5. Reinstall the heat baffle, heat diffuser, FLAVORIZER bars and cooking grates inside the cookbox. 6. Remove and clean any ash or grease from inside the ash and grease system. Once cleaned, reinstall the drawer. Replace disposable drip pans as needed. 7. Plug the grill into the power source and power on the grill to begin your cook. If the grill is unable to clear the auger jam, please refer to the following instructions on how to manually clear the auger.
E2	Fan Error	The grill will automatically run the shutdown procedure if the grill is still hot. Open the grill lid and wait until the grill has completed the shutdown procedure and completely cooled. *CAUTION: Do not unplug the grill or power it off during the shutdown procedure.* See the following instructions on how to check the fan's electrical connection. If the fan is not operating after securing fan connection, contact the Customer Service Representative in your area using the contact information on our website for fan replacement.
E3	Grill Flame is Out	1. The grill will automatically run the shutdown procedure if the grill is still hot. Open the grill lid and wait until the grill has completed the shutdown procedure and completely cooled. *CAUTION: Do not unplug the grill or power it off during the shutdown procedure.* See the following instructions on the Grill Flame Out procedure. If your grill is still unable to stay ignited after completing the procedure, contact the Customer Service Representative in your area using the contact information on our website for further troubleshooting assistance.

TROUBLESHOOTING

Error Code	Cause	Solution
E4	Communication Failure	1. The grill will automatically run the shutdown procedure if the grill is still hot. Open the grill lid and wait until the grill has completed the shutdown procedure and completely cooled. *CAUTION: Do not unplug the grill or power it off during the shutdown procedure.* 2. Once the shutdown procedure is complete, power off the grill and unplug from power source. 3. Wait one minute, then plug the grill back into the power source and power on the grill to begin your cook.
E5	Grill is too Hot	1. The grill will automatically run the shutdown procedure if the grill is still hot. Keep the grill lid closed and wait until the grill has completed the shutdown procedure and completely cooled. *CAUTION: Do not unplug the grill or power it off during the shutdown procedure.* 2. Once the shutdown procedure is complete, power off the grill and unplug from power source. 3. Open the grill lid and remove the cooking grates, FLAVORIZER bars, heat diffuser, and heat baffle from the cookbox. 4. Clean the cookbox and burn pot of any ash or debris using a grill brush or scraper to direct it into the ash and grease system. *CAUTION: Allow time for the ash and debris to fully extinguish before cleaning the grill.* 5. Reinstall the heat baffle, heat diffuser, FLAVORIZER bars and cooking grates inside the cookbox. 6. Remove and clean any ash or grease from inside the ash and grease system. Once cleaned, reinstall the drawer. Replace disposable drip pans as needed. 7. Plug the grill into the power source and power on the grill to begin your cook.
E6	Start Up Failure	1. The grill will automatically run the shutdown procedure if the grill is still hot. Open the grill lid and wait until the grill has completed the shutdown procedure and completely cooled. *CAUTION: Do not unplug the grill or power it off during the shutdown procedure.* 2. Once the shutdown procedure is complete, power off the grill and unplug from power source. 3. Open the grill lid and remove the cooking grates, FLAVORIZER bars, heat diffuser, and heat baffle from the cookbox. 4. Clean the cookbox and burn pot of any ash or debris using a grill brush or scraper to direct it into the ash and grease system. *CAUTION: Allow time for the ash and debris to fully extinguish before cleaning the grill.* 5. Remove and clean any ash or grease from inside the ash and grease system. Once cleaned, reinstall the drawer. Replace disposable drip pans as needed. 6. Plug the grill into the power source and power on the grill. 7. Turn and push the dial on the controller to select 400°F as your grill temperature. 8. As the grill starts to preheat, visually inspect the glow plug at the bottom of the cookbox. *WARNING: Do not touch the glow plug to check if it is hot*. If the glow plug is operating correctly, it will start to glow in color as it heats. **If the glow plug is operating correctly:** 9. Reinstall the heat baffle, heat diffuser, FLAVORIZER bars and cooking grates inside the cookbox. **If the glow plug is not operating correctly:** • The grill will remain cool and will not ignite. Shutdown the grill by pressing and holding the dial on the controller. Contact the Customer Service Representative in your area using the contact information on our website for glow plug replacement.

Error Code	Cause	Solution
E7	Motor Failure	The grill will automatically run the shutdown procedure if the grill is still hot. Open the grill lid and wait until the grill has completed the shutdown procedure and completely cooled. *CAUTION: Do not unplug the grill or power it off during the shutdown procedure.* See the following instructions on how to check the motor's electrical connection. If the motor is not operating after securing the motor connection, contact the Customer Service Representative in your area using the contact information on our website for motor replacement.
E8	Thermocouple Error	The grill will automatically run the shutdown procedure if the grill is still hot. Open the grill lid and wait until the grill has completed the shutdown procedure and completely cooled. *CAUTION: Do not unplug the grill or power it off during the shutdown procedure.* Contact the Customer Service Representative in your area using the contact information on our website to replace the thermocouple.
E9	Low Fuel Detection Error	The grill will automatically run the shutdown procedure if the grill is still hot. Open the grill lid and wait until the grill has completed the shutdown procedure and completely cooled. *CAUTION: Do not unplug the grill or power it off during the shutdown procedure.* See the following instructions on how to clean the low fuel sensor window. If the low fuel sensor is not operating properly after cleaning, contact the Customer Service Representative in your area using the contact information on our website for low fuel sensor replacement.

TROUBLESHOOTING

E1 Auger Jam

Clearing an Auger Jam

To clear the E1 error code from the controller, please follow these steps:

1. When the grill has completed the shutdown procedure and completely cooled, power off the grill and unplug from power source.
2. Remove the cooking grates, FLAVORIZER bars, heat diffuser, and heat baffle from the cookbox. **(A)**.
3. From the rear of your SMOKEFIRE grill, place a large bucket or container underneath the middle of the hopper **(B)**.
4. Pull the hopper slide door located on the rear of the hopper to release the pellets into the container below **(C)**.
5. From the rear of your SMOKEFIRE grill, remove the rear access panel by removing four screws **(D)**.
6. Disconnect wire connection from the motor by pinching the clip and pulling the quick disconnect plug. **(E)**.

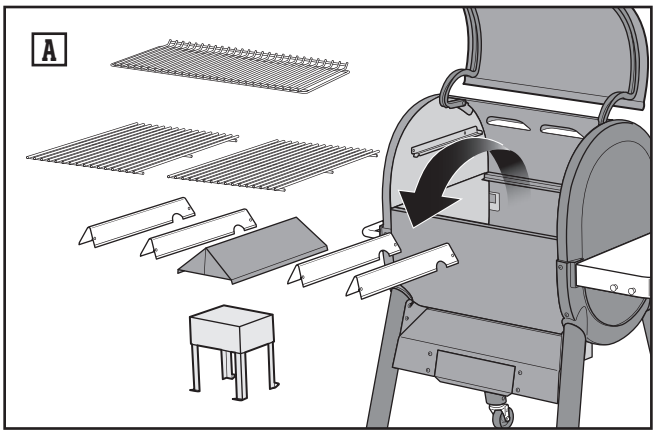

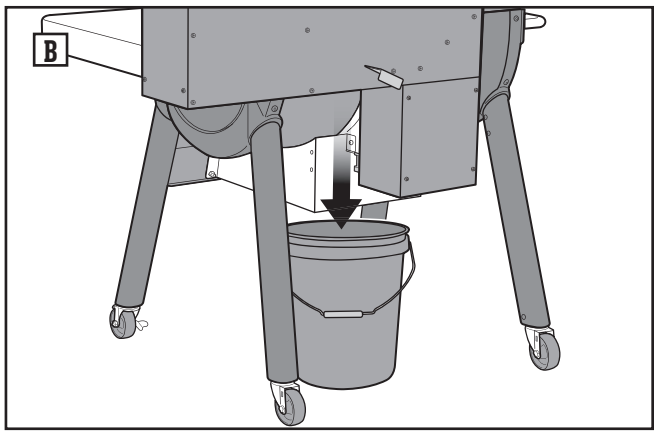

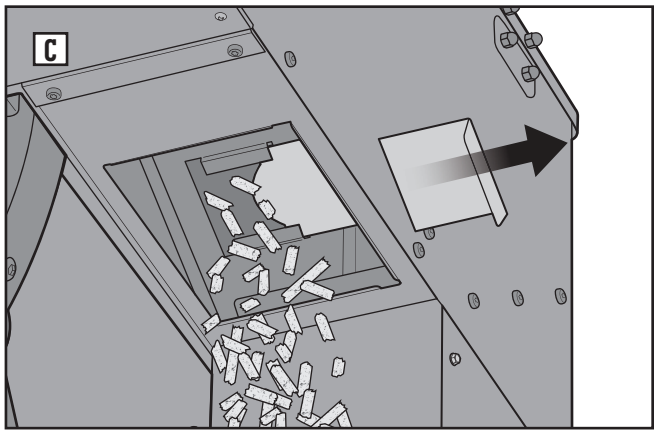

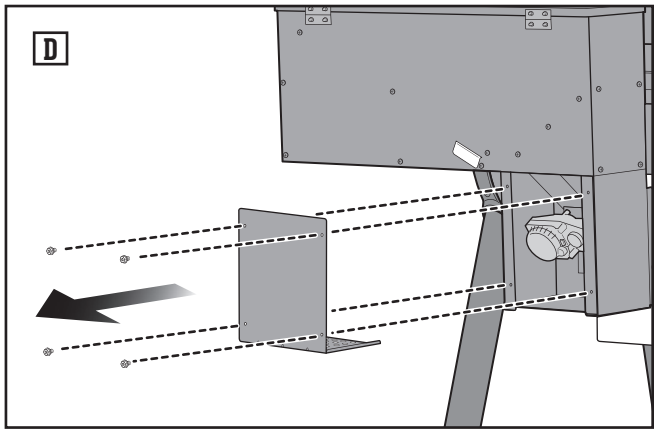

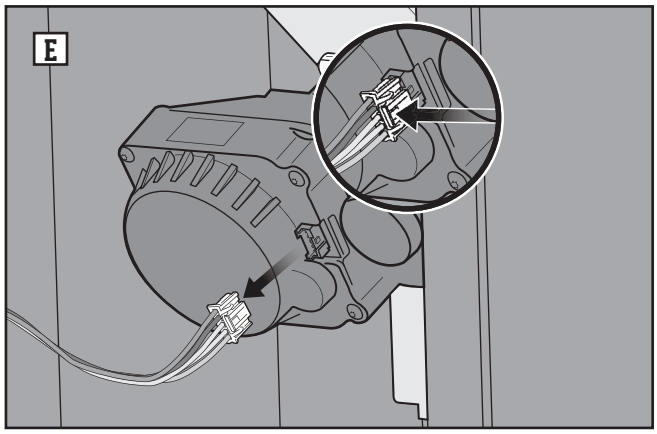

7. Remove the auger/motor assembly by first removing two screws and washers from the mounting bracket **(F)**. Carefully slide and twist the auger/motor assembly out and away from the grill **(G).**

NOTE: Visually note the orientation of the motor when installed on the grill.

8. Clean the auger tube and auger/motor assembly to remove any pellets and debris that may have been jamming the auger.

9. Before reinstalling the auger/motor assembly back into the auger tube, verify that the shear pin is still intact **(H)**. Both sides of the pin should be fully engaged and visible. The auger should not pull away from the motor. If the shear pin is broken, it should be replaced before reassembling. Contact a WEBER Customer Service Representative in your area using the contact information on our website for a replacement.

10. Reinstall the auger/motor assembly by sliding the auger through the auger tube and fastening the assembly with two screws and washers **(I).**

CAUTION: Make sure the auger/motor assembly is in the correct orientation when reinstalling into the auger tube. See illustration **(J)**.

11. Connect the motor's electrical connection. Make sure the connector is securely joined to the motor **(K)**.

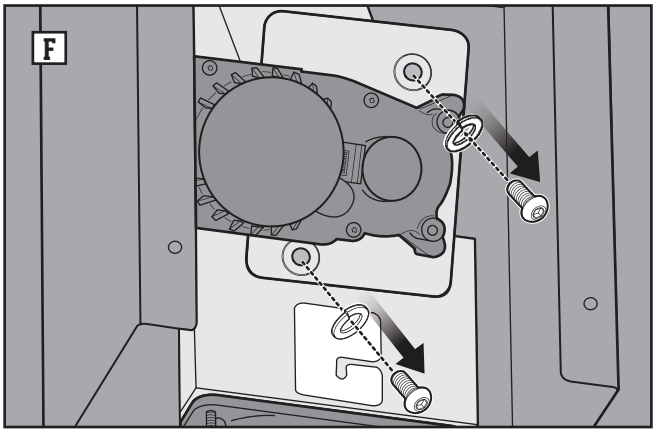

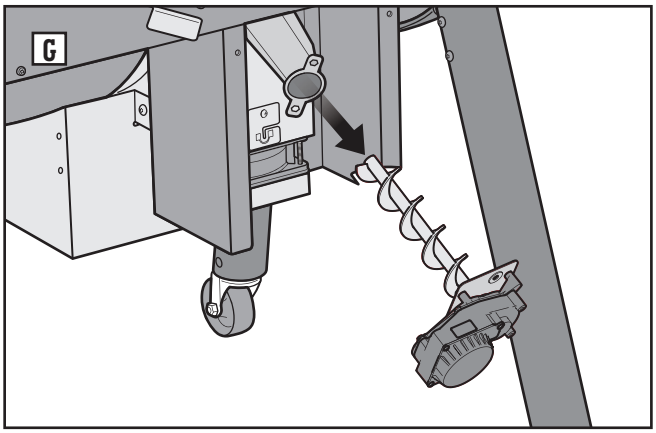

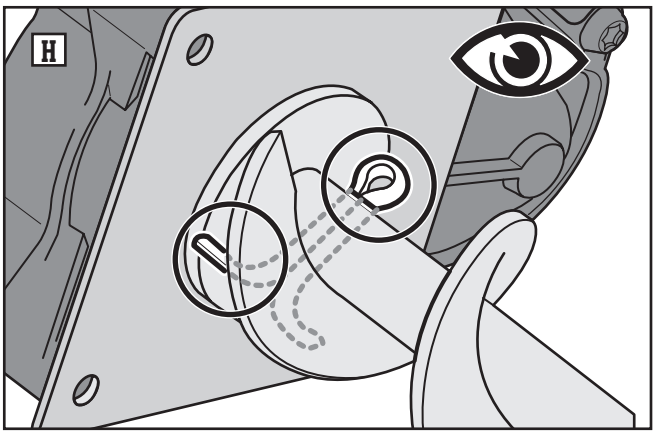

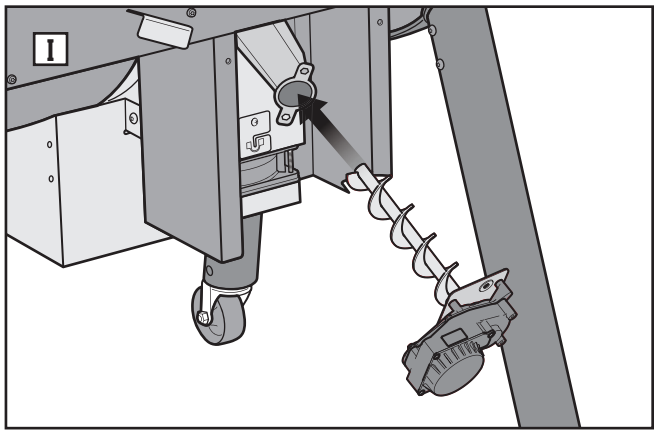

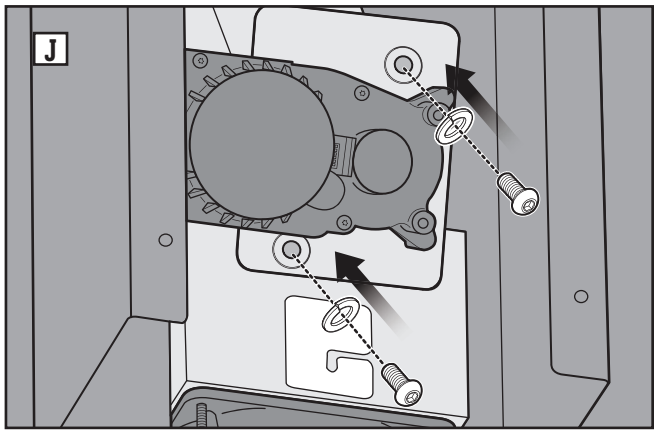

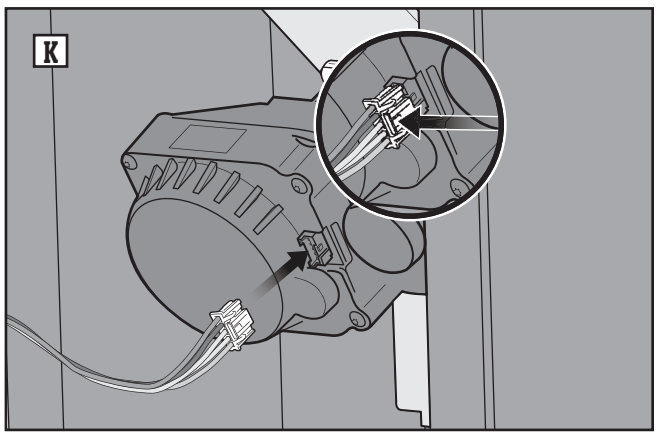

TROUBLESHOOTING

Continued...

12. Reinstall the rear access panel **(L)**.
13. Push the hopper slide door closed **(M)**.
14. Open the hopper lid and fill the hopper with your choice of WEBER SMOKEFIRE ALL NATURAL HARDWOOD PELLETS **(N)**.
15. Reinstall the heat baffle, heat diffuser, FLAVORIZER bars and cooking grates inside the cookbox. **(O).**
16. Plug in, power on the grill, and begin a cook to allow the controller to run diagnostics. If the E1 error code still remains on the controller, contact the Customer Service Representative in your area using the contact information on our website.

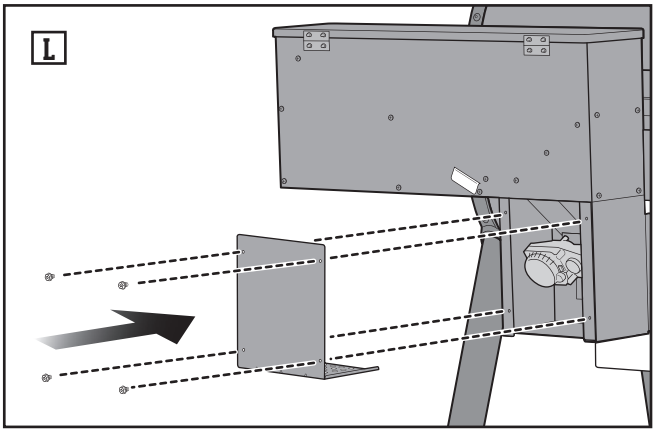

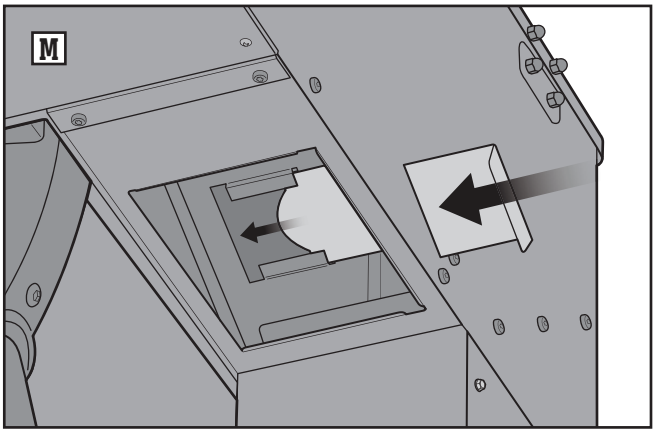

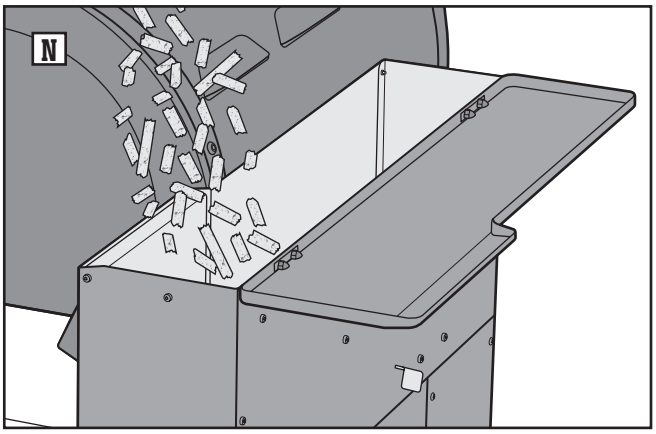

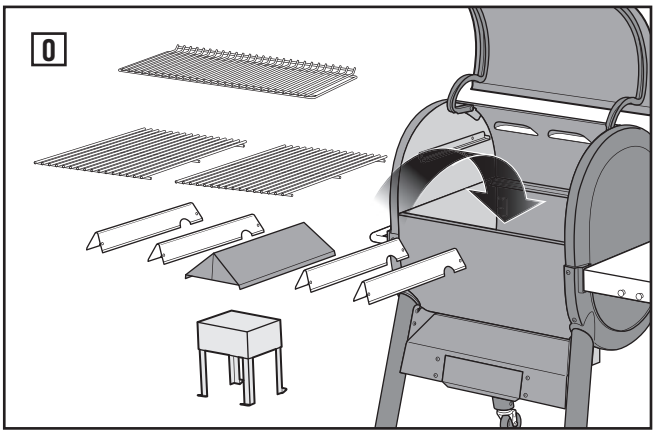

E2 Fan Error

Checking Fan Electrical Connection

To clear the E2 error code from the controller, please follow these steps:

1. When the grill has completed the shutdown procedure and completely cooled, power off the grill and unplug from power source **(A)**.
2. From the rear of your SMOKEFIRE grill, remove the rear access panel by removing four screws **(B)**.
3. Check the electrical connection to the fan **(C)**. Make sure the connector is securely joined to the fan's connection point.
4. Reinstall the rear access panel **(D)**.
5. Plug in, power on the grill, and begin a cook to allow the controller to run diagnostics.
6. If the E2 error code still remains on the controller, contact the Customer Service Representative in your area using the contact information on our website for fan replacement.

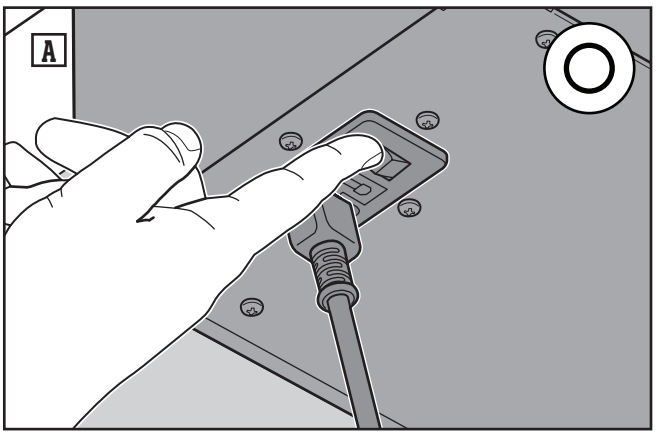

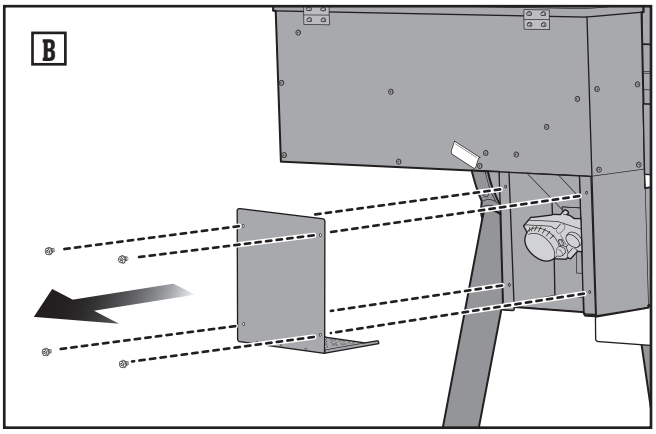

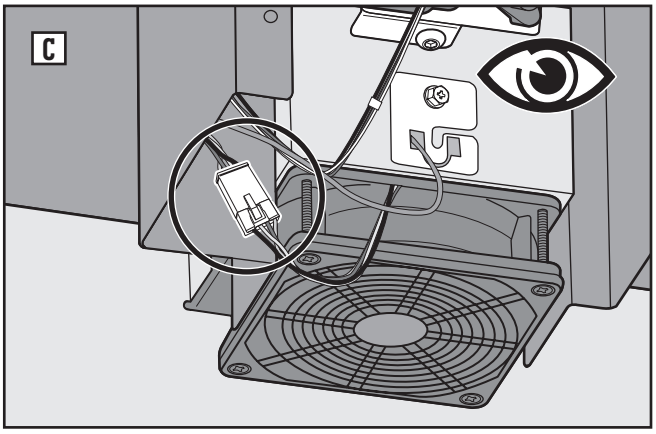

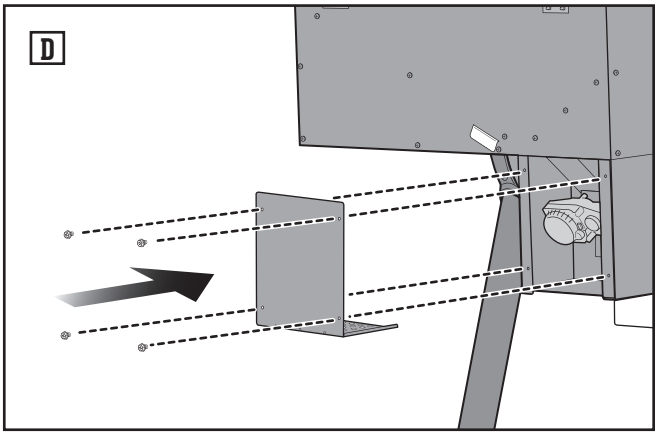

TROUBLESHOOTING

E3 Grill Flame is Out

Grill Flame Out Procedure

To clear the E3 error code from the controller, please follow these steps:

1. The grill will automatically run the shutdown procedure if the grill is still hot. Open the grill lid and wait until the grill has completed the shutdown procedure and completely cooled.

CAUTION: Do not unplug the grill or power it off during the shutdown procedure.

2. Once the shutdown procedure is complete, power off the grill and unplug from power source **(A)**.
3. Open the grill lid and remove the cooking grates, FLAVORIZER bars, heat diffuser, and heat baffle from the cookbox **(B)**.
4. Clean the cookbox and burn pot of any ash or debris using a grill brush or scraper to direct it into the ash and grease system **(C)**.

CAUTION: Allow time for the ash and debris to fully extinguish before cleaning the grill.

5. Reinstall the heat baffle, heat diffuser, FLAVORIZER bars and cooking grates inside the cookbox **(D)**.
6. Remove and clean any ash or grease from inside the ash and grease system. Once cleaned, reinstall the drawer **(E)**. Replace disposable drip pans as needed.
7. Plug the grill into the power source and power on the grill to begin your cook.

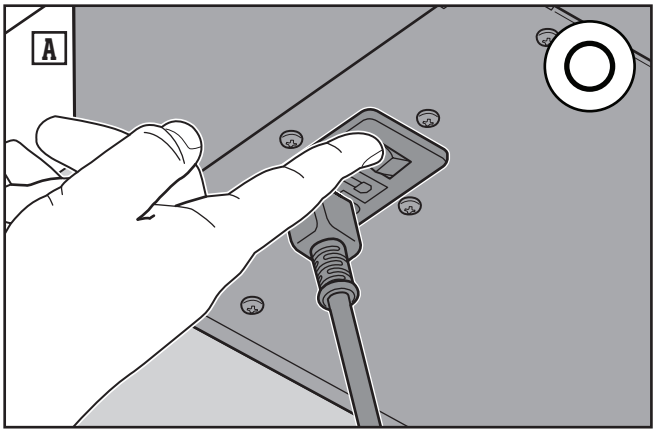

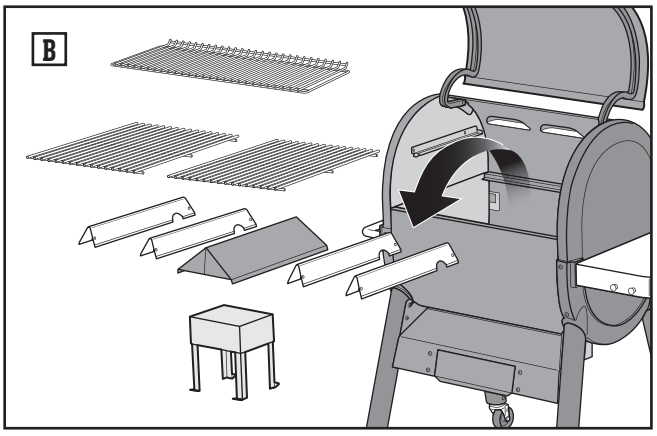

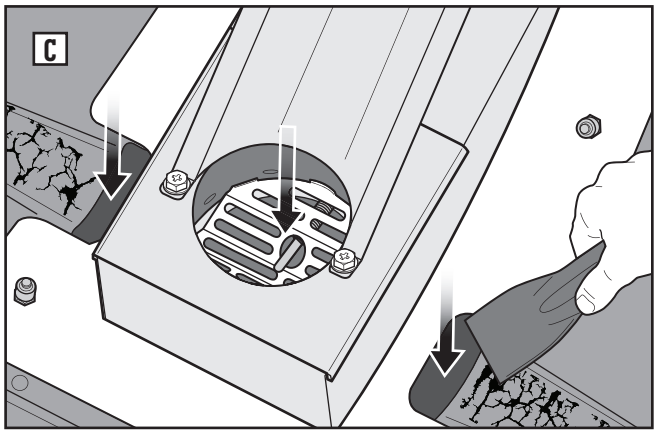

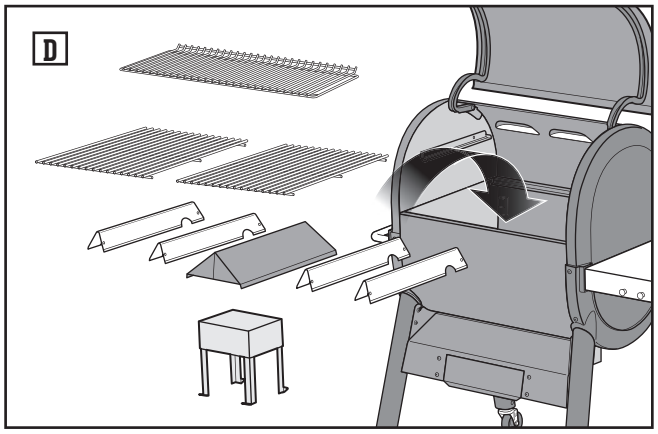

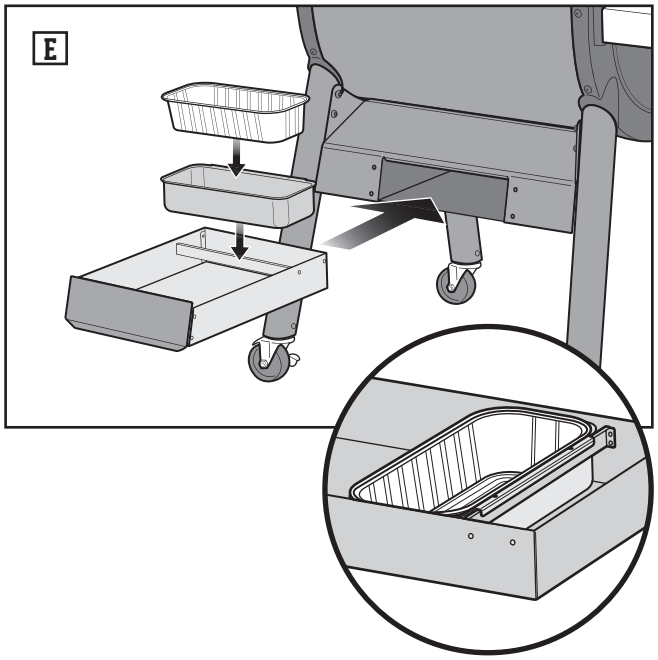

E7 Motor Failure

Checking Motor Electrical Connection

To clear the E7 error code from the controller, please follow these steps:

1. When the grill has completed the shutdown procedure and completely cooled, power off the grill and unplug from power source **(A)**.
2. From the rear of your SMOKEFIRE grill, remove the rear access panel by removing four screws **(B)**.
3. Check the electrical connection on the motor **(C)**. Make sure the connector is securely joined to the motor.
4. Reinstall the rear access panel **(D)**.
5. Plug in, power on the grill, and begin a cook to allow the controller to run diagnostics.
6. If the E7 error code still remains on the controller, contact the Customer Service Representative in your area using the contact information on our website for motor replacement.

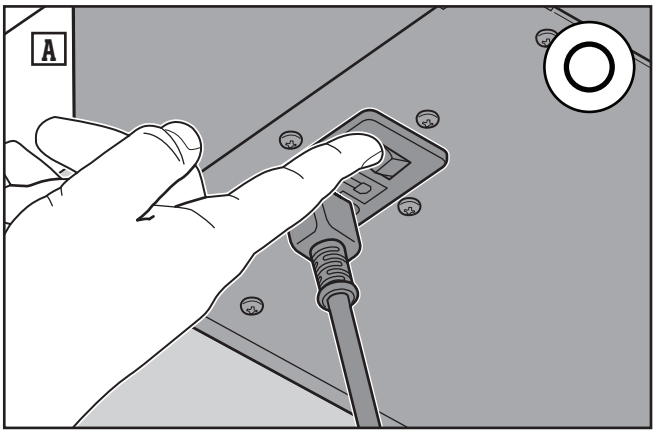

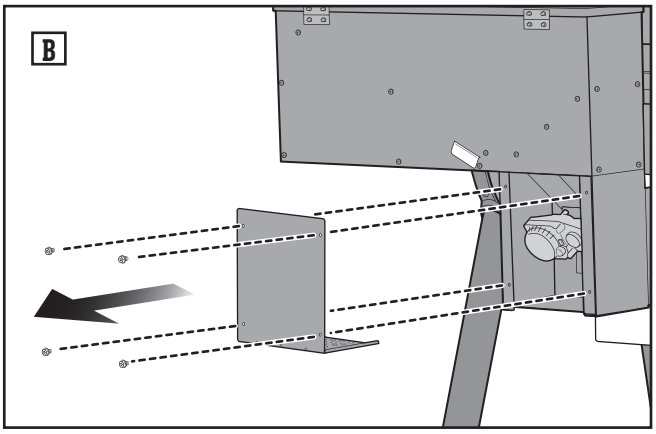

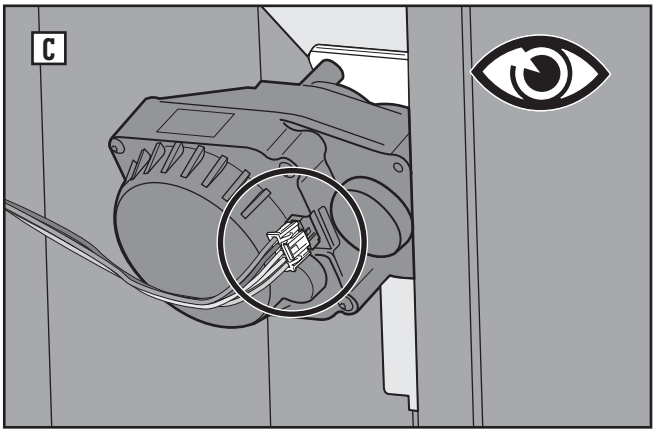

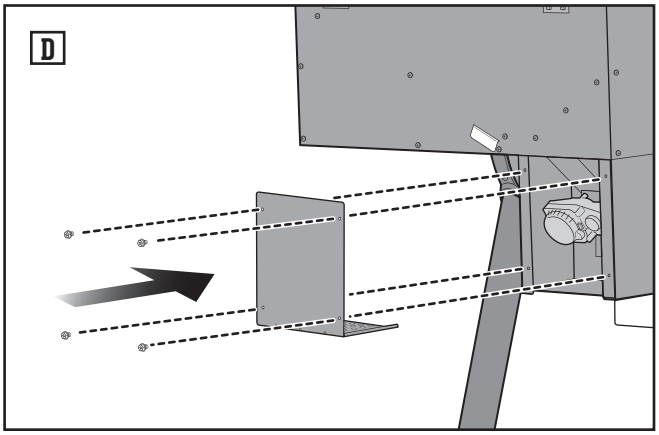

TROUBLESHOOTING

E9 Low Fuel Detection Error

Cleaning Fuel Sensor Window

To clear the E9 error code from the controller, please follow these steps:

1. When the grill has completed the shutdown procedure and completely cooled, from the rear of your SMOKEFIRE grill, set a large bucket or container underneath the middle of the hopper **(A)**.
2. Pull the hopper slide door located on the rear of the hopper to release the pellets into the container below **(B)**.
3. Using a dry cloth or paper towel, wipe the low fuel sensor window until cleaned **(C)**.
4. Push the hopper slide door closed **(D)**, and refill the hopper with your choice of WEBER SMOKEFIRE ALL NATURAL HARDWOOD PELLETS.
5. Power on the grill and begin a cook to allow the controller to run diagnostics.
6. If the E9 error code still remains on the controller, Contact the Customer Service Representative in your area using the contact information on our website for low fuel sensor replacement.

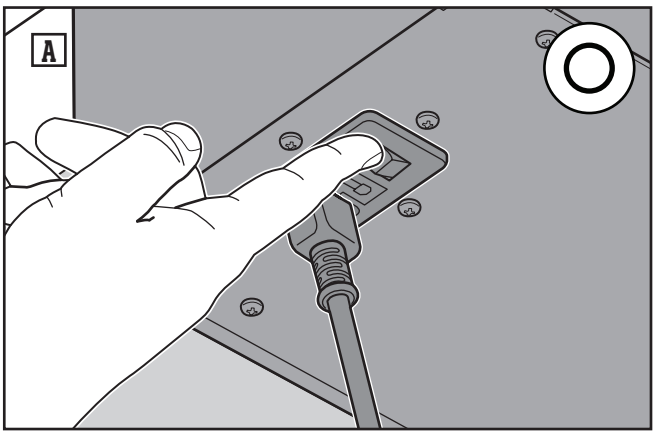

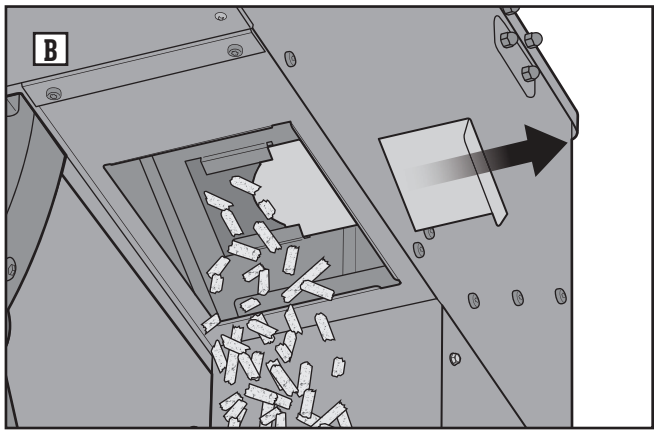

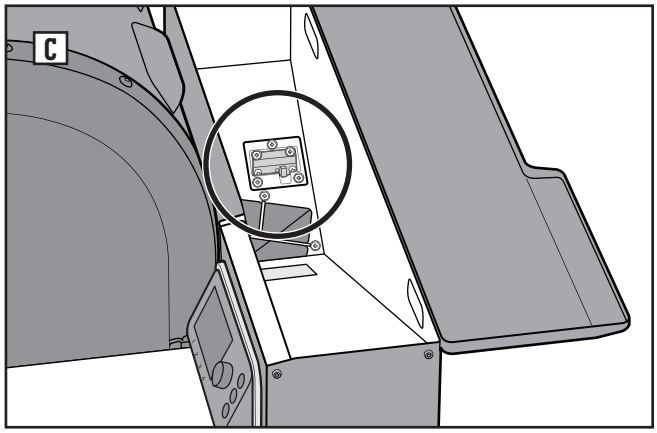

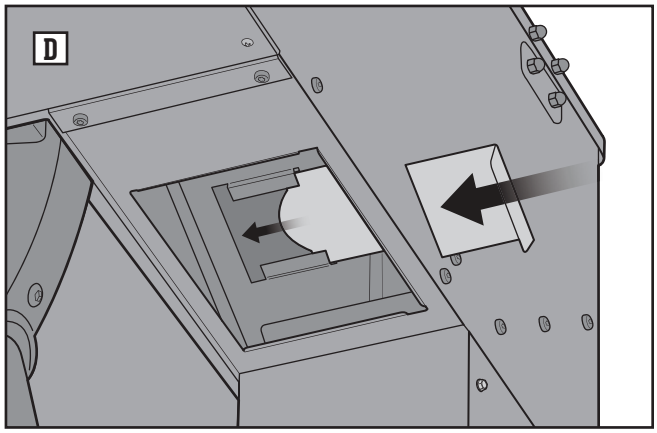

TROUBLESHOOTING

NOTE: Download the WEBER CONNECT app to get the latest grill software and controller features.

The controller will display and send notifications to inform you of certain grill operations and preventative maintenance cautions. Refer to this troubleshooting section and follow the "Sequence / Actions" column associated with the notification displayed along with the following instructions.

Notification	Sequence / Actions
Low Fuel	Refill the hopper with WEBER SMOKEFIRE ALL NATURAL HARDWOOD PELLETS.
Cook Complete	Your cook has ended. You now have the option to continue to cook at the same grill temperature, change the grill temperature, or shutdown the grill.
Improper Shutdown	The grill was improperly shutdown. 1. The grill will automatically run the shutdown procedure if the grill is still hot. Open the grill lid and wait until the grill has completed the shutdown procedure and completely cooled. *CAUTION: Do not unplug the grill or power it off during the shutdown procedure.* 2. Once the shutdown procedure is complete, power off the grill and unplug from power source. 3. Remove the cooking grates, FLAVORIZER bars, heat diffuser, and heat baffle from the cookbox. 4. Clean the cookbox and burn pot of any ash or debris using a grill brush or scraper to direct it into the ash and grease system. *CAUTION: Allow time for the ash and debris to fully extinguish before cleaning the grill.* 5. Remove and clean any ash or grease from inside the ash and grease system. Once cleaned, reinstall the drawer. Replace disposable drip pans as needed. 6. Reinstall the heat baffle, heat diffuser, FLAVORIZER bars and cooking grates inside the cookbox. 7. Plug in, power on the grill, and begin a cook to allow the controller to run diagnostics.
Replace Glow Plug	Glow plug is about to reach the end of its life. Do you want to replace it? <u>If YES:</u> 1. Open the grill lid and shutdown the grill by pushing and holding the dial or using the main menu. Wait until the grill has completed the shutdown procedure and completely cooled. *CAUTION: Do not unplug the grill or power it off during the shutdown procedure.* 2. Contact a Customer Service Representative in your area using the contact information on our website to replace the glow plug. 3. See the following instructions on replacing the glow plug. 4. When the glow plug has been replaced, confirm replacement within the main menu settings of the controller. <u>If NO:</u> You can continue to operate your grill. Glow plug replacement notification will remain on list of outstanding error codes and notifications until it has been replaced and confirmed.
Shutdown Started	Shutdown Sequence: 1. Burning off excess fuel 2. Preventing burn-back 3. Clearing auger 4. Cleaning burn pot of ash 5. Cooling grill for storage 6. Shutdown Complete

TROUBLESHOOTING

Replacing the Glow Plug

Contact WEBER Customer Service at weber.com for a replacement glow plug. To replace the glow plug, please follow these steps:

1. Open the grill lid and shutdown the grill by pushing and holding the dial or using the main menu. Wait until the grill has completed the shutdown procedure and completely cooled.

CAUTION: Do not unplug the grill or turn it off during the shutdown procedure.

2. Once the grill has completed the shutdown procedure, power off the grill **(A)** and unplug from power source.
3. Open the grill lid and remove the cooking grates, FLAVORIZER bars, heat diffuser, and heat baffle from the cookbox. **(B)**.
4. From the rear of your SMOKEFIRE grill, remove the rear access panel by removing four screws **(C)**.
5. Unplug the glow plug assembly wire by pinching and pulling the quick disconnect plug **(D)**.
6. Carefully remove the glow plug assembly by removing the bracket screw that holds it in place and sliding the assembly out from the grill **(E)**.
7. Remove the glow plug from the glow plug assembly by pulling it out and away **(F)**.
8. Install the replacement glow plug into the glow plug assembly by firmly pushing it into the socket **(G)**.
9. Carefully reinstall the glow plug assembly straight through the back of the grill, and secure it in place by tightening the bracket screw **(H)**.

NOTE: Be sure that the tip of the glow plug has been properly installed by visually inspecting the glow plug at the bottom of the burn pot inside the cookbox. The tip of the glow plug must be inserted through the pellet grate for proper operation **(I)**.

10. Reconnect the glow plug assembly wire connector **(J)**.
11. Reinstall the rear access panel **(K)**.
12. Reinstall the heat baffle, heat diffuser, FLAVORIZER bars and cooking grates inside the cookbox. **(L)**.
13. Plug the power cord into the grill located underneath the hopper, then plug the grill into a power source.
14. Power on the grill and confirm replacement of the glow plug within the main menu settings of the controller.

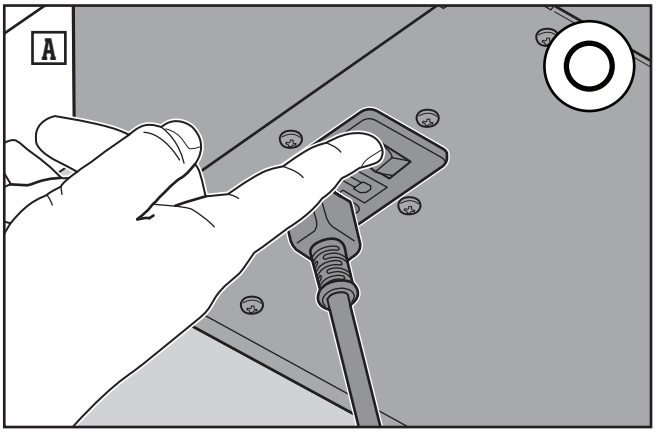

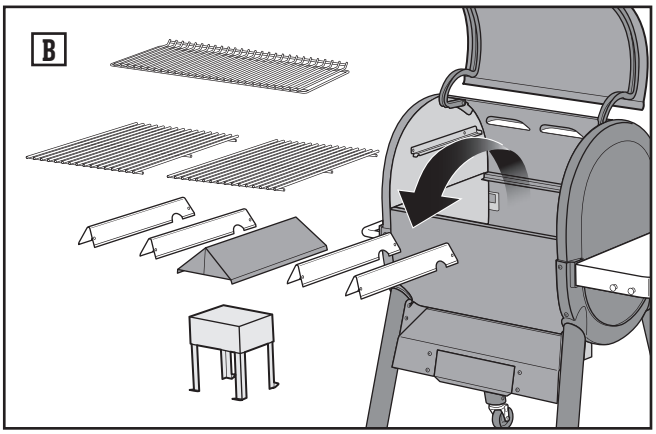

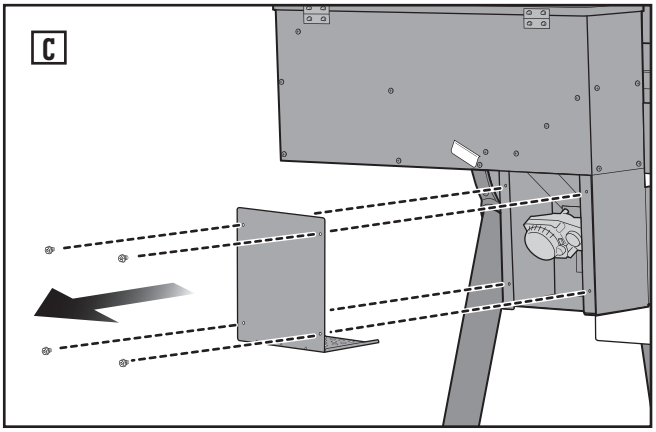

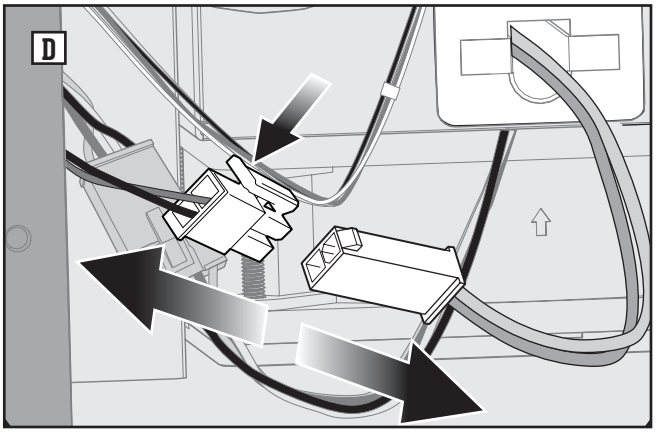

E

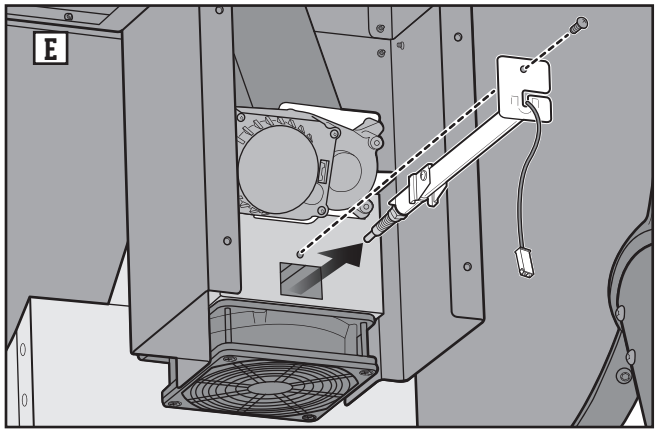

I

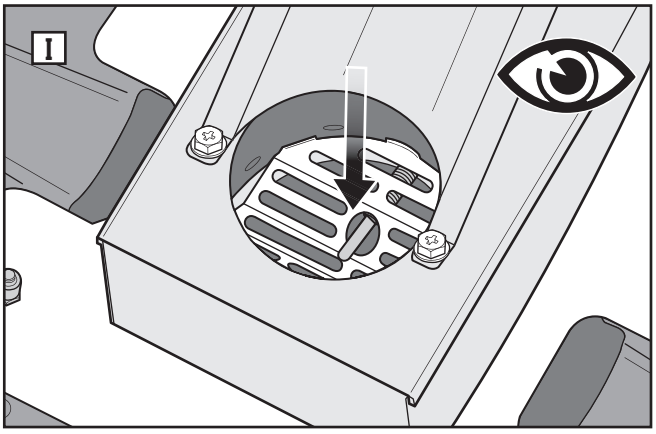

F

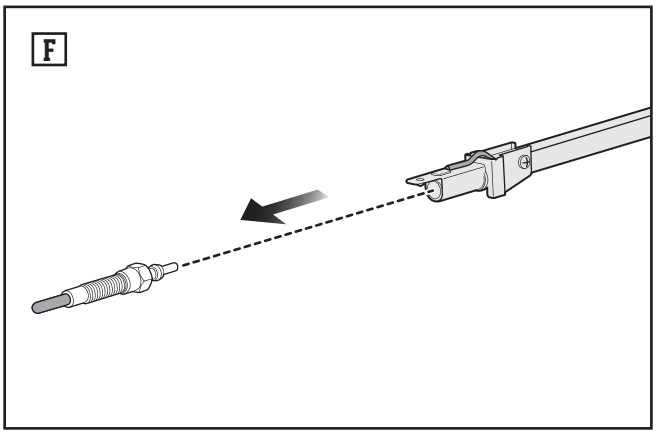

J

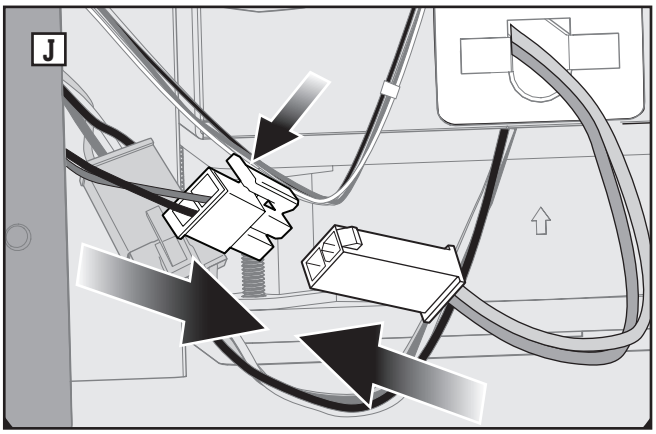

G

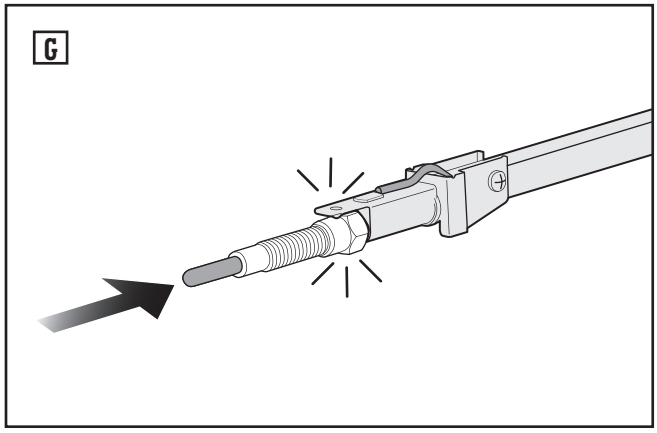

K

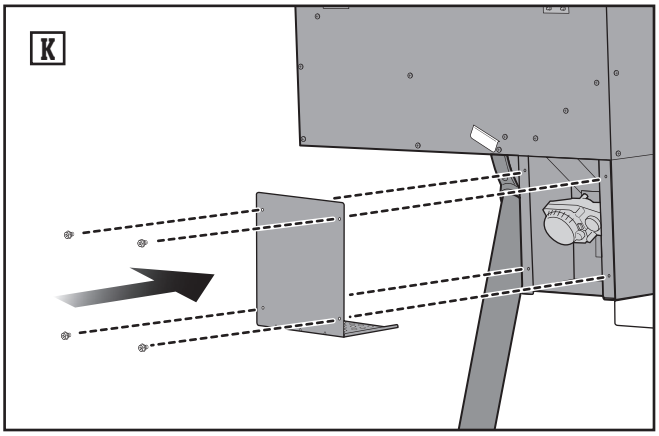

H

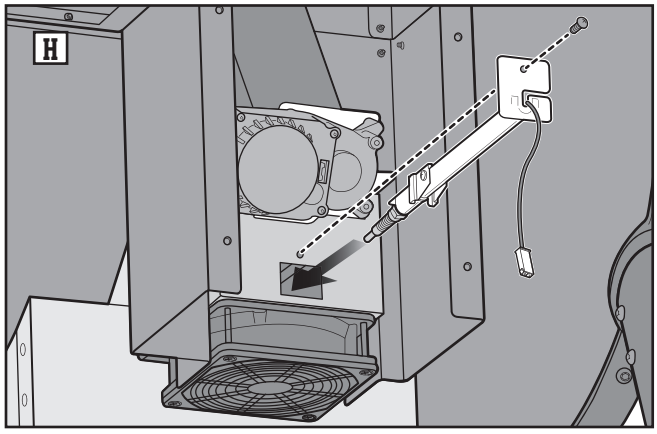

L

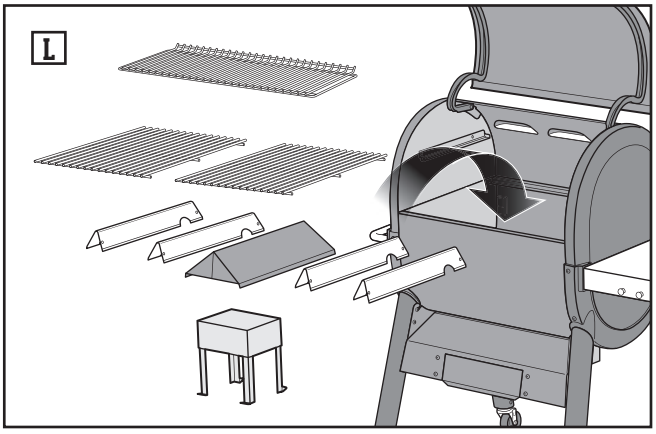

TROUBLESHOOTING

Symptom	Cause / Actions
Grill will not power on	If the grill will not power on: 1. Check that the power cord is securely plugged into the grill and into a power source. 2. If your grill is using a GFCI outlet, reset the device. 3. If the grill will still not power on after you have completed the above checks, it is likely that the fuse has blown. See the following instructions on how to replace the grill's fuse. 4. If the grill will not power on after all steps have been followed, contact the Customer Service Representative in your area using the contact information on our website.
Inside of grill lid appears to have peeling paint	The flakes you see are accumulated cooking vapors that have turned into carbon. This happens over time after repeated use of your grill. This is not a defect. Using a grill brush or the included grill scraper, gentley scrub and clean the carbon flakes off of the lid and cookbox. Wipe clean with a soft cloth or paper towel.

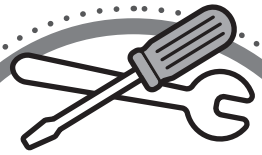

REPLACEMENT PARTS

To obtain replacement parts, contact the local retailer in your area or log onto weber.com.

CALL CUSTOMER SERVICE

If you are still experiencing any problems, contact the Customer Service Representative in your area using the contact information on weber.com.

Fuse Replacement

If your SMOKEFIRE grill is non-responsive even after securing all electrical connections, it is possible that the grill's fuse has blown. The grill's power supply utilizes a cartridge fuse. This simple and inexpensive part can be easily replaced with the following instructions:

CAUTION: Only use the properly sized and rated fuse when replacing. Failure to do so will void your warranty. The correct fuse is:

1.6A

250V

5x20mm

Fast blow

1. Make sure that the grill is completely cool, then power off and unplug the grill from the power source **(A)**.
2. The fuse is installed inside the fuse holder located on the underside of the hopper. Use a flathead screwdriver to gently pry open the fuse holder and remove the fuse **(B)**.

NOTE: WEBER recommends replacing the fuse if there is suspicion of failure.

3. Install a new fuse into the fuse holder and reinstall the fuse holder into the power module **(C)**.

CAUTION: Make sure the fuse holder is fully installed and closed before operating your grill.

4. Plug in, power on the grill, and begin a cook to allow the controller to run diagnostics.

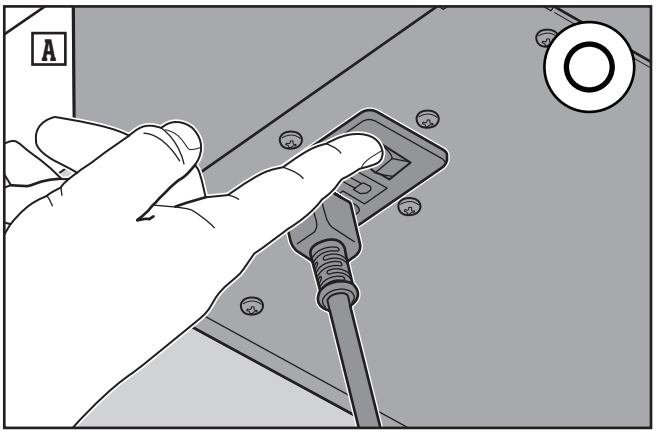

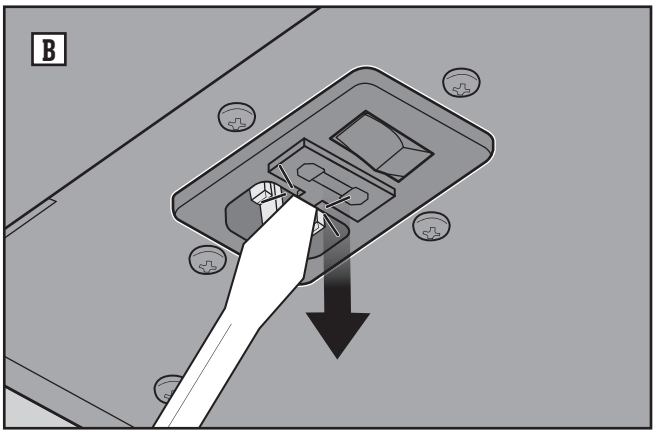

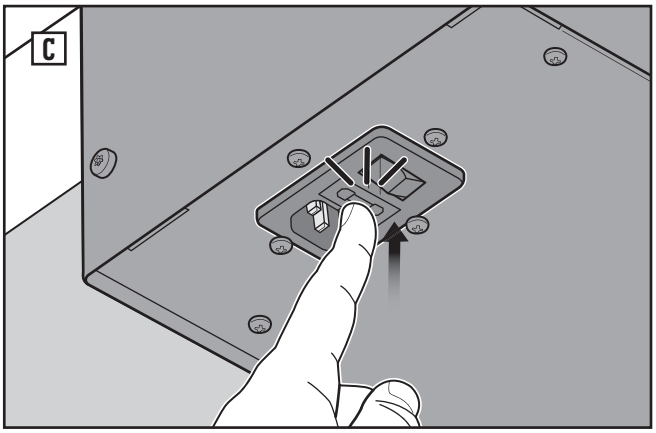

MAINTENANCE

Recommended Cleaning

In order to keep your WEBER SMOKEFIRE grill running smoothly for years of barbecuing and smoking, WEBER recommends a thorough cleaning of the grill after 20 hours of cooking or after every 12 cooks. Additional cleaning may be required after the completion of low & slow cooks, before beginning a high temperature cook, to remove fatty deposits not burned off at low temperatures.

WARNING: ALWAYS MAKE SURE THE GRILL IS COMPLETELY COOLED AND UNPLUGGED FROM A POWER SOURCE BEFORE PERFORMING ANY MAINTENANCE OR CLEANING.

CAUTION: NEVER SPRAY THE GRILL WITH A STEADY WATER STREAM SUCH AS FROM A GARDEN HOSE OR POWER WASHER. ELECTRONIC COMPONENTS COULD BECOME DAMAGED.

CAUTION: WEBER recommends the use of barbecue mitts or rubberized gloves to protect your hands while cleaning your grill.

Please follow these steps for cleaning your grill:

1. Once your grill has completed a proper shut down and completely cooled, power off the grill and unplug from the power source.
2. Open the grill lid and brush or scrape the lid clean with a grill brush or the included scraper.
3. While in place, brush or scrape the cooking grates clean, then remove them from the cookbox and set aside.
4. While the FLAVORIZER bars and heat diffuser are in place, brush or scrape them clean, then remove them from the cookbox and set aside.
5. Hold the heat baffle steady with one hand and brush or scrape clean with a grill brush or scraper with the other hand. Then remove from the cookbox and set aside.
6. Brush or scrape the interior of the cookbox with a grill brush or scraper. Direct all of the grease and debris towards the vents in the bottom of the cookbox, and into the disposable drip pan.
7. Using the included scraper or a soft bristle brush, clean out the burn pot, pushing any remaining ash or debris through the pellet grate at the bottom of the burn pot.
8. Remove the ash and grease system drawer to clean out ash and replace the disposable drip pan. In addition, clean the inside of the ash and grease system housing to prevent a buildup of ash that could stop the drawer from fully closing. Once the drawer and housing have been cleaned, reinstall the drawer.

WARNING: DO NOT REMOVE THE ASH AND GREASE SYSTEM DRAWER WHILE OPERATING THE GRILL, OR IF STILL HOT AFTER SHUTDOWN. Frequently replace the disposable drip pan before igniting the grill to reduce the risk of a grease fire.

9. Reinstall the heat baffle, heat diffuser, FLAVORIZER bars and cooking grates inside the cookbox.

Annual Engine Cleaning

Every 12 months, your SmokeFire grill should have a thorough engine cleaning performed in order to ensure proper grill operation.

WARNING: ALWAYS MAKE SURE THE GRILL IS COMPLETELY COOLED AND UNPLUGGED FROM A POWER SOURCE BEFORE PERFORMING ANY MAINTENANCE OR CLEANING.

CAUTION: NEVER SPRAY THE GRILL WITH A STEADY WATER STREAM SUCH AS FROM A GARDEN HOSE OR POWER WASHER. ELECTRONIC COMPONENTS COULD BECOME DAMAGED.

CAUTION: WEBER recommends the use of barbecue mitts or rubberized gloves to protect your hands while cleaning your grill.

Please follow these steps for cleaning your SmokeFire engine:

1. Once your grill has completed a proper shut down and completely cooled, power off the grill and unplug from the power source.
2. Remove the rear access panel located at the rear of the grill.
3. Unplug the glow plug electrical connection, remove the glow plug assembly, and set it aside.
4. Open the grill lid and remove the cooking grates, FLAVORIZER bars, and heat baffle from the cookbox.
5. Remove the 2 screws that secure the pellet slide to the top of the burn pot, and remove the pellet slide from the cookbox.
6. Remove the burn pot and pellet grate from the cookbox.
7. Using the included scraper or a soft bristle brush, clean the burn pot area by brushing or scraping any ash or debris down the vent into the ash and grease managment system.

NOTE: Be sure to thoroughly clean any built up ash and debris that may have occurred during grill operation.

8. Reinstall the pellet grate, burn pot, and pellet slide. Be sure to reinstall the two screws that secure the pellet slide to the top of the burn pot.
9. Reinstall the glow plug assembly through the rear of the grill.

NOTE: Visually inspect that the tip of the glow plug is installed properly through the pellet grate located at the bottom of the cookbox. If it is not through the pellet grate, you must remove the glow plug assembly again to adjust and reinstall it.

10. Reconnect the glow plug assembly electical connection.
11. Reinstall the rear access panel located at the rear of the grill by securing four screws.
12. Reinstall the heat baffle, FLAVORIZER bars, and cooking grates inside the cookbox.

Cleaning the Exterior of the Grill

The outside of your grill may include stainless steel, porcelain enameled, and plastic surfaces. WEBER recommends the following methods based on the surface type.

Cleaning Stainless Steel Surfaces

Clean stainless steel using a non-toxic, non-abrasive stainless steel cleaner or polish designed for use on outdoor products and grills. Use a soft, lint-free cloth to clean in the direction of the grain of the stainless steel. Do not use paper towels.

CAUTION: Do not risk scratching your stainless steel with abrasive pastes. Pastes do not clean or polish. They will change the color of the metal by removing the top chromium oxide film coating.

Cleaning Painted, Porcelain-Enameled Surfaces and Plastic Components

Clean painted, porcelain-enameled and plastic components with warm soapy water and a soft, lint-free cloth. After wiping down the surfaces, lightly rinse and dry thoroughly.

Cleaning the Outside of Grills that are in Unique Environments

If your grill is subject to a particularly harsh environment, you will want to clean the outside more often. Acid rain, pool chemicals, and salt water can cause surface rusting to appear. Wipe down the outside of your grill with warm soapy water. Follow up with a light rinse and thorough drying. Additionally, you may want to apply a non-abrasive stainless steel cleaner weekly to prevent surface rust. Use only as directed.

Cleaning the Temperature Probes

Your included temperature probes should be cleaned after every use to ensure safe cooking practices. However, the temperature probes should never be submerged in any type of liquid because it could damage them. WEBER recommends gently wiping the temperature probes clean with warm soapy water and a soft cloth or paper towel.

Wear Gloves

Always wear heat-resistant barbecue mitts or gloves when using your WEBER SMOKEFIRE grill. Vents, handles, ash and grease system, and cookbox will all get hot during the grilling process and can cause severe burns. Be sure to keep your hands and forearms protected.

Preheat Your Grill

Preheating your grill with the lid closed prepares the cooking grates and internal cookbox temperature for grilling. The heat loosens any bits and pieces of food hanging onto the cooking grates, making it easy to clean them off with a grill brush or wood scraper. Preheating your grill also gets the cooking grates hot enough to sear properly and also helps prevent food from sticking to them.

CAUTION: When using a stainless steel bristle grill brush, be sure to check for loose bristles. Replace the brush if any loose bristles are found on cooking grate or brush.

Put A Lid On It

It is important to remember to always cook with your grill lid closed. This will keep your internal cookbox temperature where you want it to be and throughly cook your food.

Mix It Up

There are many varieties of WEBER SMOKEFIRE ALL NATURAL HARDWOOD PELLETS like Hickory, Apple, Cherry, and more. You can experiment by mixing different flavors of pellets. Explore the possibilities.

Cook Time and Temperature

If you are grilling in a colder climate or in windy conditions, the cooking times could be longer. These conditions will lower the grill's temperature, so always monitor your grill and use food temperature probes to ensure safe food temperatures. Remember to keep the grill lid closed as much as possible during cooking so the heat and smoke do not escape.

⚠ **WARNING!** Always unplug the grill from a power source and wait for the grill to completely cool before performing any maintenance or cleaning.

⚠ **WARNING!** Never spray the grill with a steady water stream such as from a garden hose or power washer. Electronic components could become damaged.

⚠ **WARNING!** Over time, the development of rough surfaces can form on the heat baffle, FLAVORIZER bars, heat diffuser, and cooking grates. Wearing protective gloves is recommended when handling these parts.

⚠ **WARNING!** Do not clean the heat baffle, FLAVORIZER bars, heat diffuser, or cooking grates in a sink, dishwasher, or self-cleaning oven.

⚠ **WARNING!** Do not place any grill parts onto the side table as they may scratch the stainless steel.

⚠ **WARNING!** Do not use any of the following to clean your grill:

- Abrasive stainless steel polishes or pastes
- Cleaners that contain acid, mineral spirits or xylene
- Oven cleaner
- Abrasive cleansers or pads

REPLACEMENT PARTS

Use only genuine WEBER replacement parts for any repair or replacement. Visit weber.com

SmokeFire - EX4 - US 040320

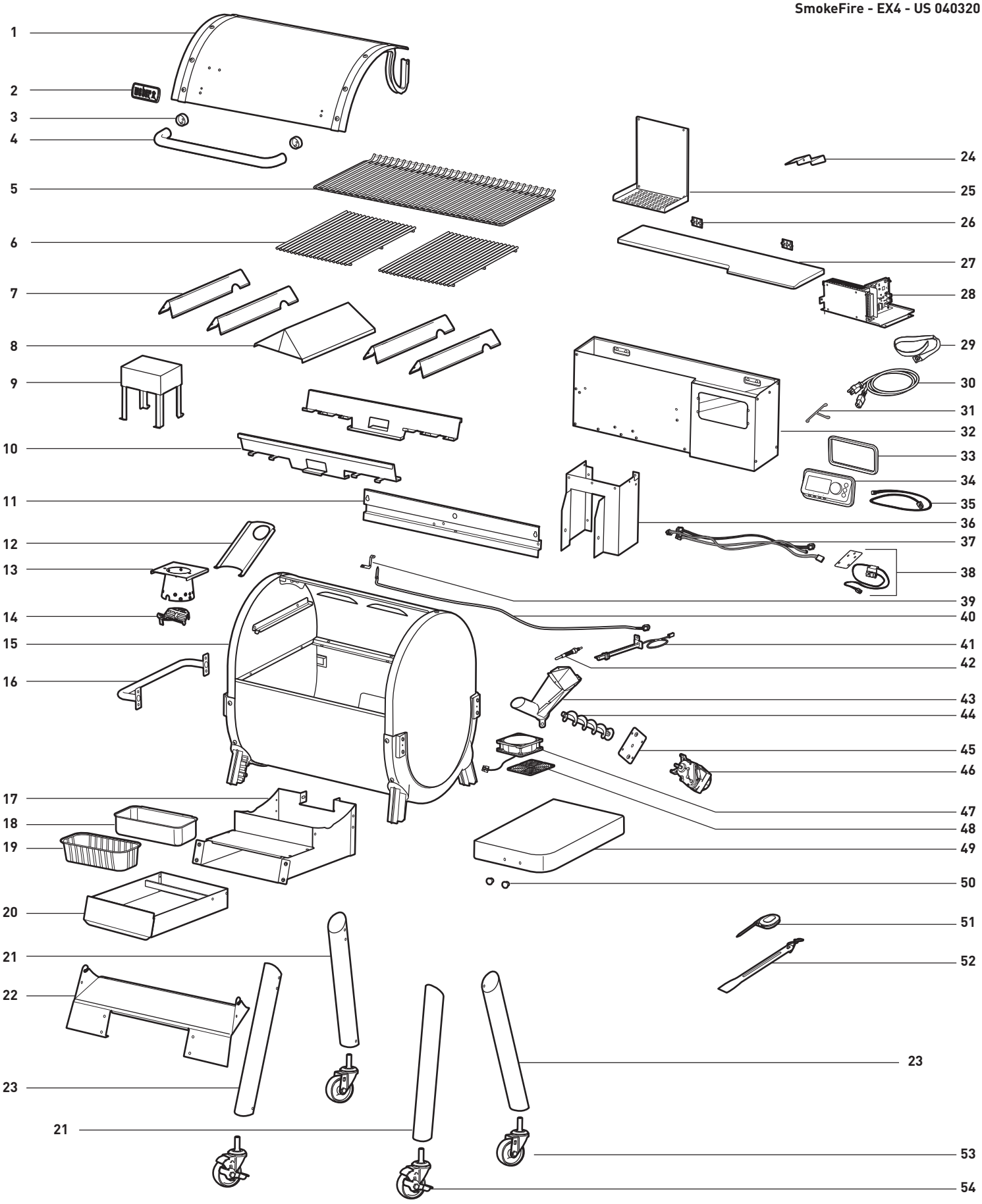

Use only genuine WEBER replacement parts for any repair or replacement. Visit weber.com

REPLACEMENT PARTS

SmokeFire - EX6 - US 040320

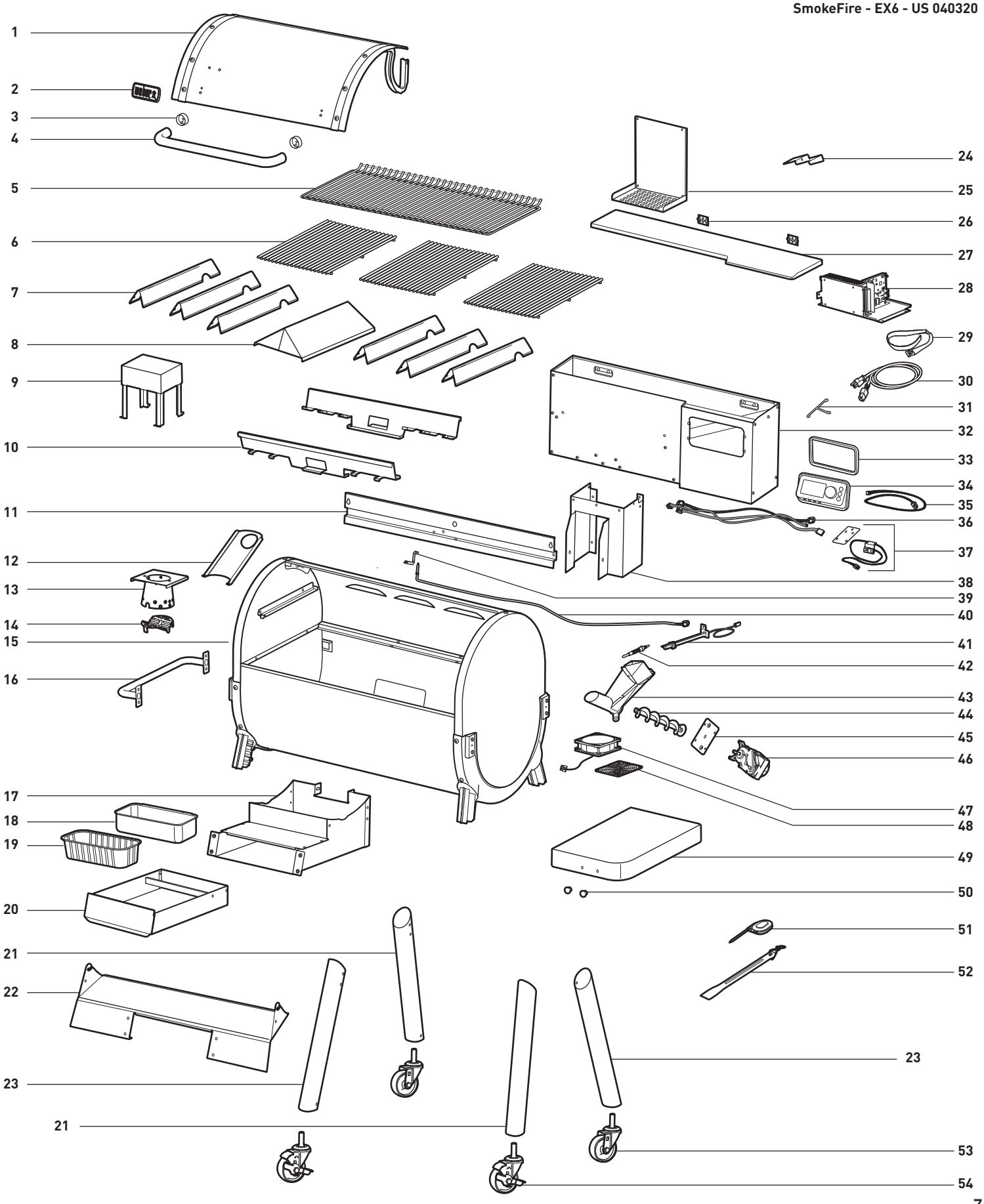

FCC Compliance: This equipment has been tested and found to comply with the limits for a Class B digital device, pursuant to part 15 of the FCC rules. These limits are designed to provide reasonable protection against harmful interference in a residential installation. This equipment generates, uses and can radiate radio frequency energy and, if not installed and used in accordance with the instructions, may cause harmful interference to radio communications. However, there is no guarantee that interference will not occur in a particular installation. If this equipment does cause harmful interference to radio or television reception, which can be determined by turning the equipment off and on, the user is encouraged to try to correct the interference by one or more of the following measures: (1) Reorient or relocate the receiving antenna. (2) Increase the separation between the equipment and receiver. (3) Connect the equipment into an outlet on a circuit different from that to which the receiver is connected. (4) Consult the manufacturer, dealer or an experienced radio/TV technician for help. Changes or modifications not expressly approved by Weber could void the user's authority to operate this device.

FCC Radio Frequency (RF) Exposure: This equipment complies with FCC and ISED Canada radiation exposure limits set forth for an uncontrolled environment. The user should avoid prolonged exposure within 20cm of the antenna, which may exceed the FCC or RSS-102 radio frequency exposure limits.

IC Compliance: This device contains license-exempt transmitter(s)/receiver(s) that comply with Innovation, Science and Economic Development Canada's license-exempt RSS(s). Operation is subject to the following two conditions: (1) This device may not cause interference; and (2) This device must accept any interference, including interference that may cause undesired operation of the device.

IFETEL Compliance: Operation of this unit is subject to the following two conditions: (1) this unit or device may not cause harmful interference, and (2) this unit or device must accept any interference, including interference that may cause undesired operation.

ULC/ORD-C2728 2013

UL2728A 2019

EN 1860-1:2017

EN 55014-1:2017

EN 55014-2:2015

Bluetooth® SMART

C US

Apple and the Apple logo are trademarks of Apple Inc., registered in the U.S. and other countries. App Store is a service mark of Apple Inc. Android is a trademark of Google LLC. Google Play and the Google Play logo are trademarks of Google LLC.

The Bluetooth® word mark and logos are registered trademarks owned by Bluetooth SIG, Inc. and any use of such marks by Weber-Stephen Products LLC is under license. Other trademarks and trade names are those of their respective owners.

© 2020 Designed and engineered by Weber-Stephen Products LLC,
1415 S. Roselle Road, Palatine, Illinois 60067 USA.

WEBER-STEPHEN PRODUCTS LLC
www.weber.com

© 2020 Designed and engineered by Weber-Stephen Products LLC,
1415 S. Roselle Road, Palatine, Illinois 60067 USA.